FORM NO. H11-516 REV. 1
Supersedes Form No. H11-516 Rev. 0

AIR HANDLERS

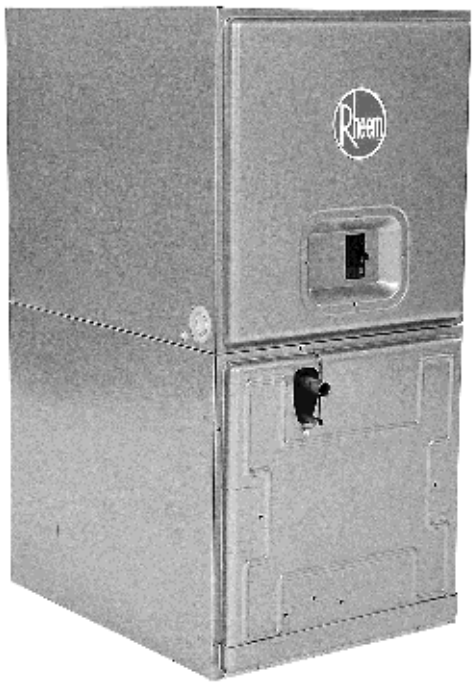

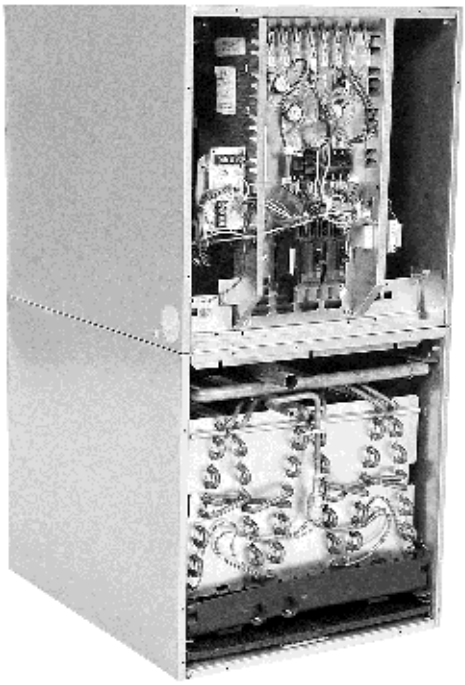

RBHK- SERIES HEAT PUMP AIR HANDLERS AND FAN COIL UNIT

Features

- Versatile 4-way convertible design for upflow, downflow, horizontal left and horizontal right.
- Available from factory in upflow and horizontal configurations.
- Nominal airflow up to 1.0" external static pressure.
- Optional factory or field installed MultiFlex® coils.
- Sturdy double wall construction with .5 inch [12.7 mm] of foil faced insulation for excellent sound and insulating characteristics.
- Permanent, easily accessible and washable filter furnished standard.
- Circuit breaker (standard on units with more than 11 kW) meets U.L. and cUL requirements for service disconnect.
- Factory installed auxiliary electric heat provides exact heat for indoor comfort over a variety of applications.
- Watt restrictors, standard on RBHK-17 models above 6 kW and on RBHK-21, 24 and 25 models above 11 kW, stage supplemental heat so that only the necessary amount is engaged to maintain comfort in the conditioned space.
- Dip switch settings for selectable, customized cooling airflow over a wide variety of applications.
- On-demand dehumidification terminal that adjusts airflow to help control humidity for unsurpassed comfort in cooling mode.

Accredited by the RvA
ABS Quality Evaluations, Inc. Management System Certification
ANSI·RAB OMS ACCREDITED
ISO 9002
Certificate Number: 30164

c UL us LISTED

"CERTIFIED UNDER THE A.R.I. CERTIFICATION PROGRAM—A.R.I. STANDARDS 210/240-84"

Engineering Features

RBHK- Series

- Quiet, efficient ECM motor technology providing nominal airflow to 1.0 inch [25 kPa] of external static pressure.
- Interface board with dip switches conveniently located in the blower compartment allows for precise, field selectable airflow to meet the requirements of particular applications.
- Selectable continuous fan “on” options.
- The most compact unit design available.
- Attractive pre-painted cabinet exterior.
- Rugged double wall steel cabinet construction, designed for added strength and versatility.
- .5" foil faced insulation mechanically retained in blower compartment.
- Four leg rubber insulated wire motor mount.
- Circuit breakers standard on 1-phase models above 11 kW and optional on models with 11 kW or less.
- Models supplied with circuit breakers meet UL and cUL requirements as a service disconnect switch.
- Provisions for field electrical connections from either side of air handler cabinet.
- Tab lock blower housing with integrated electric heaters, controls, motor and blower. Slide out design for service and maintenance convenience.
- Exclusive dependable Incoloy sheath type electric heating elements located in the blower housing provide mixed warm air.
- Field convertible for vertical upflow, vertical downflow, horizontal left hand or right hand air supply.
- Common combustible floor base accessory fits all model sizes when required for downflow installations on combustible floors.
- Durable framed cleanable air filter provided as standard in unit filter rack.
- MultiFlex® indoor coil design provides low air side pressure drop, high performance and extremely compact size. All coils come with PVC condensate elbow standard.
- All indoor coils have copper tubing and aluminum fins.
- Molded polymer corrosion resistant condensate drain pan is provided on all indoor coils.
- Both supply and return duct flanges provided as standard on air handler cabinet.
- Connection points for both high voltage and low voltage control wiring inside air handler cabinet.
- Concentric knockouts are provided for power connection to cabinet. Installer may pull desired hole size up to 2 inches [51 mm] for 1 1/2 inch [38 mm] conduit.
- Patented watt restrictor on heat pump models to control electric heat during heating operation.
- Internal checked TX valves are used on the RCHJ Heat Pump indoor coil for more quiet refrigerant metering.
- Front refrigerant and drain connections.

Watt-restrictor

Supplemental heat, provided by electric heating elements may be necessary in some areas when heating requirements for indoor comfort exceed the capacity of the heat pump system.

When supplemental heat is required, units with the Watt Restrictor will restrict the amount of supplemental electric heat that can be energized dependent on the heat ouput of the heat pump (temperature of the air leaving the indoor heat pump coil).

The Watt-restrictor utilizes sensing devices in the unit to sense the air temperature leaving the indoor coil and disengage unnecessary heating elements when that temperature is at least 85°F [29°C]. (In this mode your system is controlled by the first stage of the wall thermostat.) This occurs only when the second stage of the wall thermostat calls for heat.

Since the heat ouput of the heat pump is dependent upon the outdoor air temperature, this control performs the same function as a field installed outdoor thermostat.

An additional benefit of the Watt Restrictor is that it can sense a degradation in heat pump performance due to causes other than outdoor temperature and react accordingly to bring on more supplemental electric heat.

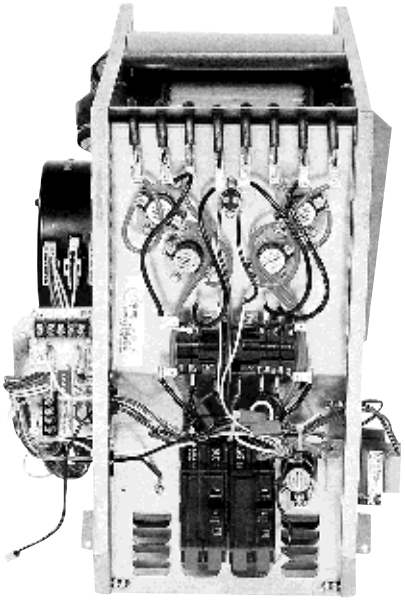

[ ] Designates Metric Conversions

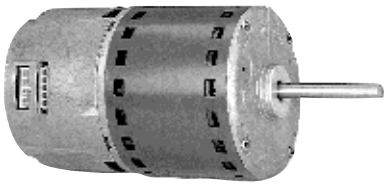

ECM MOTOR

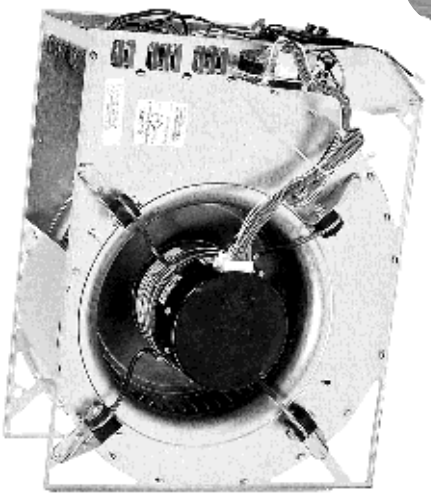

BLOWER SECTION

GENERAL TERMS OF LIMITED WARRANTY

Rheem will furnish a replacement for any part of this product which fails in normal use and service within the applicable periods stated, in accordance with the terms of the limited warranty.

MultiFlex Coil leaks caused by factory defects	Five (5) Years
Electric Heating Element	Five (5) Years
Any Other Part	Five (5) Years

For Complete Details of the Limited Warranty, Including Applicable Terms and Conditions, See Your Local Installer or Contact the Manufacturer for a Copy.

Model Identification

R	B	H	K	17	J	11	S	F	B	Additional Inform.
Rheem	Blower Unit	Type Unit	Design Series	Cab. Width	Electrical Designations	Electrical Heat (KW) Designation See Electrical Heat Data for Actual KW at 208 Volts.	Control Designation	Airflow Direction	Coil Code	Motor H.P. [W] Blower CFM [L/s] Lo/Hi Speed Blower Wheel Dia./Width [mm] Filter Size Width/Length [mm] Outdoor Unit Size
		H = Air Handler		17 21 24 25	J = 208/240V, 1PH, 60HZ	00 = No Heat 06 = 4.9 kW 07 = 7.0 kW 11 = 10.0 kW 14 = 14.0 kW 18 = 17.5 kW 21 = 21.0 kW	N = No Circuit Breakers Single Supply Circuit S = Circuit Breaker(s) Single Supply Circuit	F = Front Upflow Connection Options H = Horizontal Left Front Connection Option *U = Side Refrigerant Connection		
				17	J	00, 06, **07, 11**	N	F = Front Upflow Connection Options H = Horizontal Left Front Connection Option *U = Side Refrigerant Connection	A = w/o Coil With Casing RCGJ- B = 24A1 C = 24A2 RCHJ- D = 24A1 E = 24A2 RCHA- F = 24A1 G = 24A2 RCHL- 1 = 24A2	1/3 H.P. [249] LO-600 CFM [142] HI-800 CFM [378] 11.9 x 3.81 [302 x 97] 16.25 x 21 [413 x 533] -018 -024
						06, **07, 11**	S			
				21	J	00, 06, 07, 11	N		A = w/o Coil With Casing RCGJ- B = 36A1 C = 36A2 RCHJ- D = 36A1 E = 36A2 RCHA- F = 36A1 G = 36A2 RCHL- 2 = 36A1 3 = 36A2	1/2 H.P. [373] LO-1000 CFM [472] HI-1200 CFM [566] 11.9 x 5.29 [302 x 134] 19.75 x 21 [502 x 533] -030 -036
						06, 07, 11, **14**	S			
				24	J	00, 06, 07, 11	N		A = w/o Coil With Casing RCGJ- B = 48A1 C = 60A1 RCHJ- D = 48A1 E = 51A1* G = 48A2 RCHA- F = 48A1 RCHL- 4 = 48A1 5 = 48A2 6 = 51A1*	1/2 H.P. [373] LO-1400 CFM [661] HI-1600 CFM [755] 11.9 x 7.12 [302 x 181] 23.25 x 21 [591 x 533] -042 -048
						06, 07, 11, **14, 18**	S			
				25	J	00, 11	N		A = w/o Coil With Casing RCGJ- C = 60A1 Z = 61A1* RCHJ- Y = 61A1* E = 60A1 RCHA- H = 60A1 RCHL- 7 = 60A1 8 = 61A1*	3/4 H.P. [559] LO-1800 CFM [850] HI-2000 CFM [944] 11.9 x 9.50 [302 x 241] 23.25 x 21 [591 x 533] -060
						11, **14, 18, 21**	S			

NOTES: • Electric heater BTUH = (heater watts + motor watts) x 3.412 (See airflow table for motor watts).
• Models with **BOLD** numerals in the electrical heat (kw) column, have watt restrictor and defrost heat controls.
*Available with side refrigerant connections only.

[ ] Designates Metric Conversions

Unit Dimensions

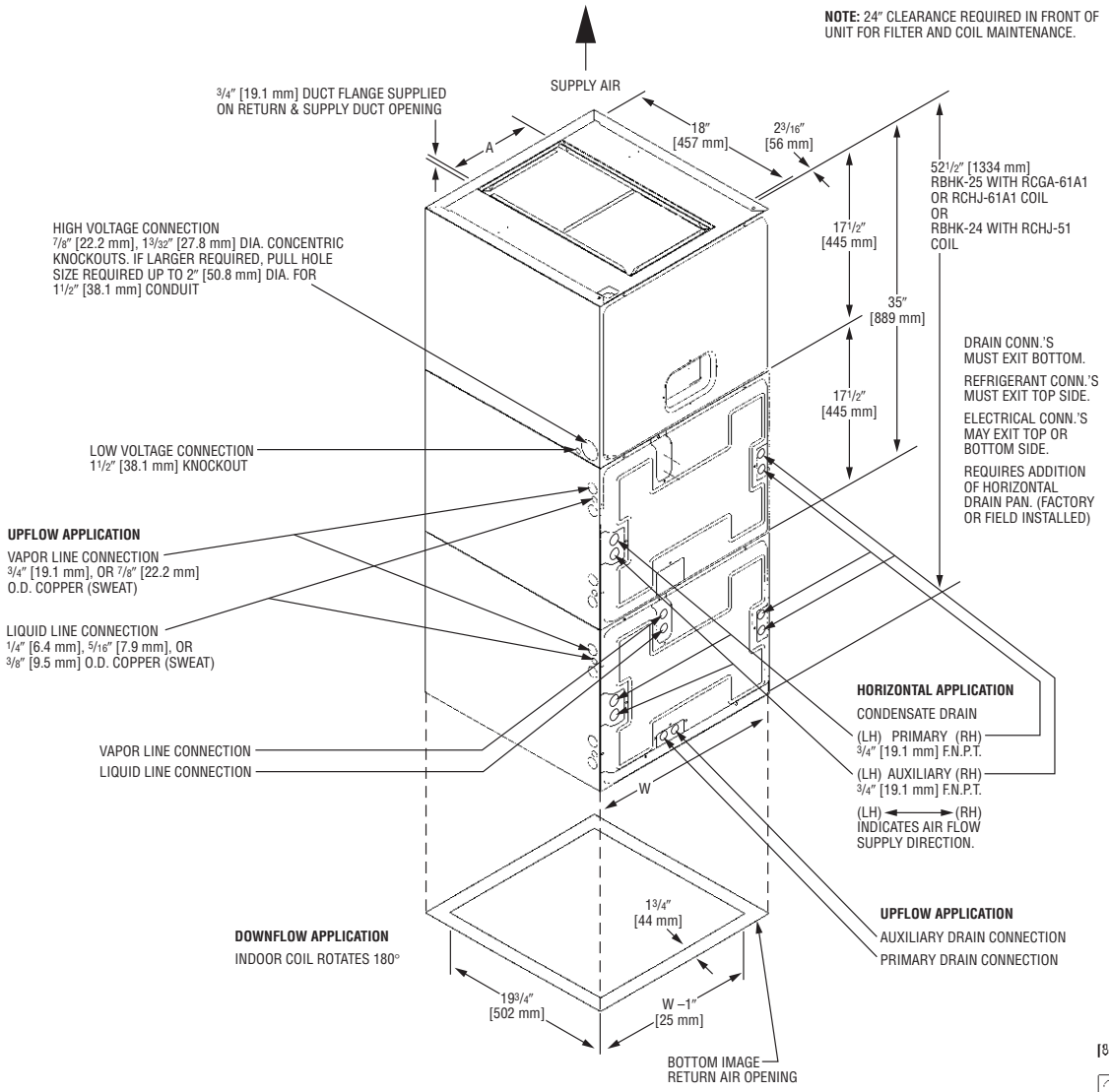

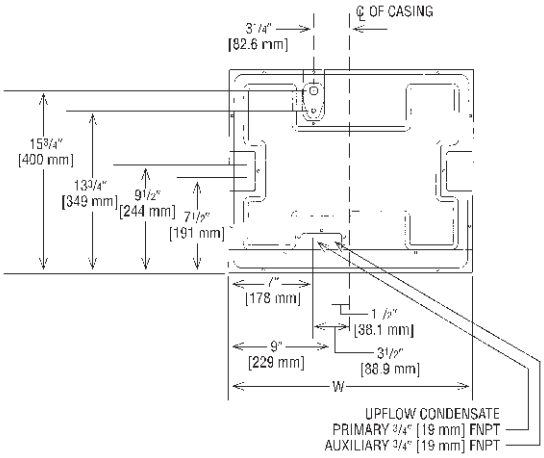

[ ] Designates Metric Conversions

( ) Designates Unit with Double Coil Cabinet

Dimensions for Front Connection Coils. For "W", see Unit Dimensions. (Single Indoor Coil Units Only)

Unit Dimensions & Weights

Model Number RBHK- (with double coil)	Unit Width "W" In. [mm]	Supply Duct "A" In. [mm]	Air Flow CFM (Nom.) [L/s]		Unit Weight/Shipping Weight (Lbs.) [kg]		
			Lo	Hi	Unit With Coil (Max. KW)	Unit Without Coil	Unit Without Coil Casing
17	17 1/2 [445]	7 9/16 [192]	600 [283]	800 [378]	92/99 [42/45]	72/79 [33/36]	53/59 [24/27]
21	21 [533]	9 7/16 [240]	1000 [472]	1200 [566]	109/117 [49/53]	83/91 [38/41]	63/69 [29/31]
24	24 1/2 [622]	11 3/4 [298]	1400 [661]	1600 [755]	125/134 [57/61]	93/102 [42/46]	71/78 [32/35]
24 (RCXX-51A1)	24 1/2 [622]	11 3/4 [298]	1400 [661]	1600 [755]	180/192 [82/87]	N/A	N/A
25 (RCXX-61A1 or RCXX-61A1)	24 1/2 [622]	11 3/4 [298]	1800 [850]	2000 [944]	183/195 [83/88]	N/A	N/A

Unit Dimensions

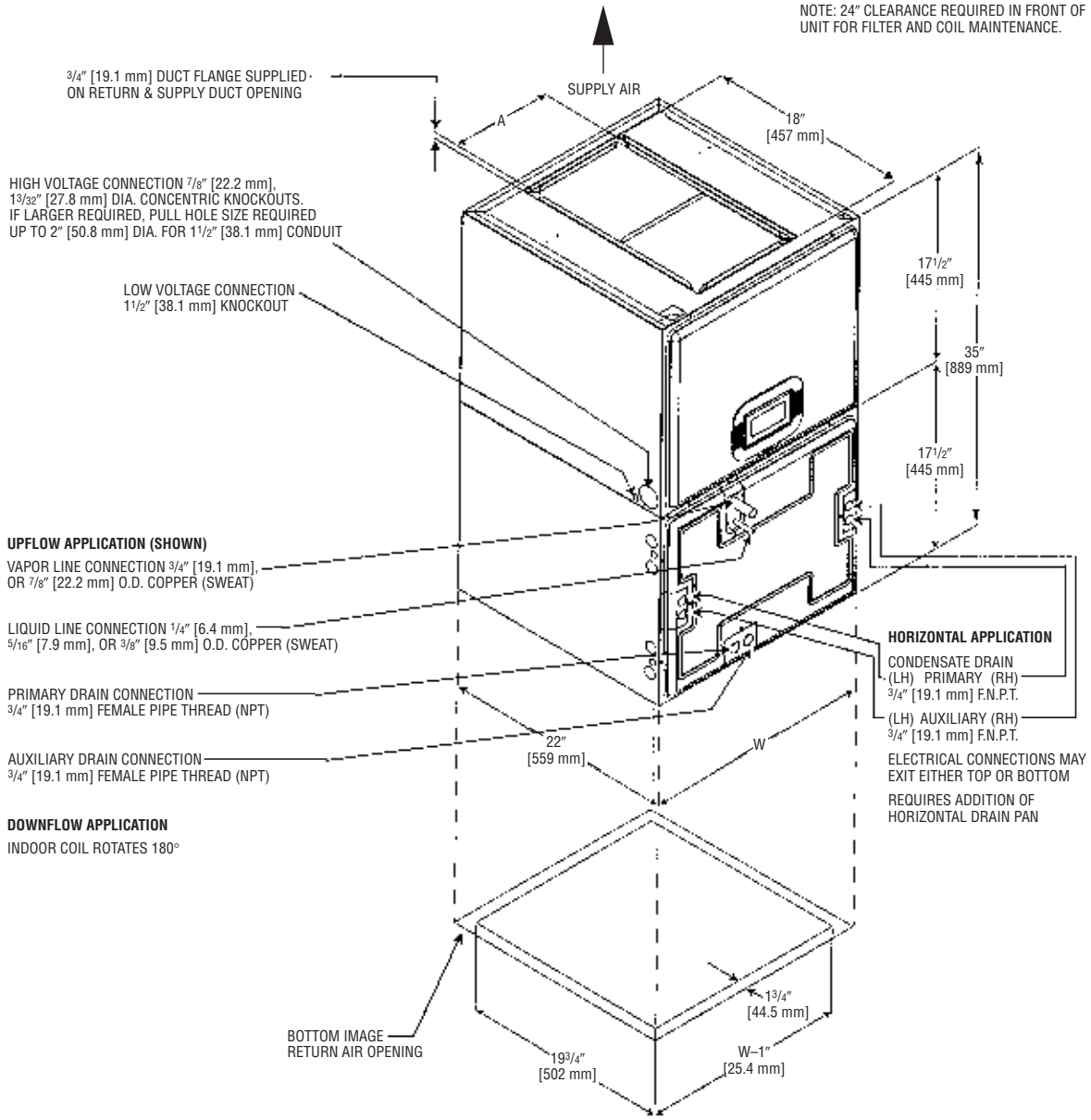

UPFLOW UNIT SHOWN:
UNIT MAY BE INSTALLED UPFLOW, DOWNFLOW, HORIZONTAL RIGHT OR LEFT HAND AIR SUPPLY.

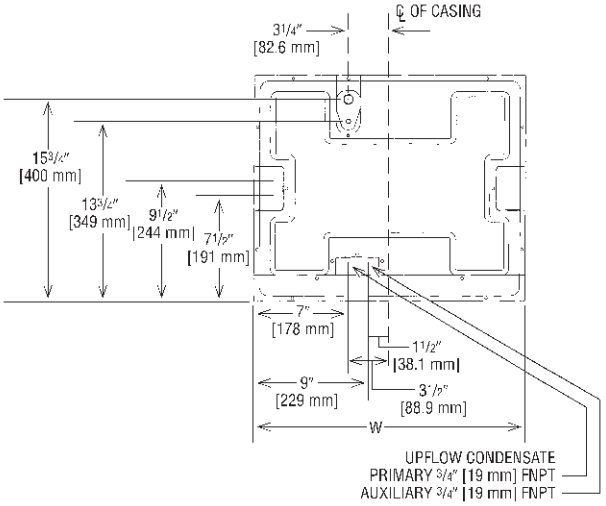

Airflow Directions

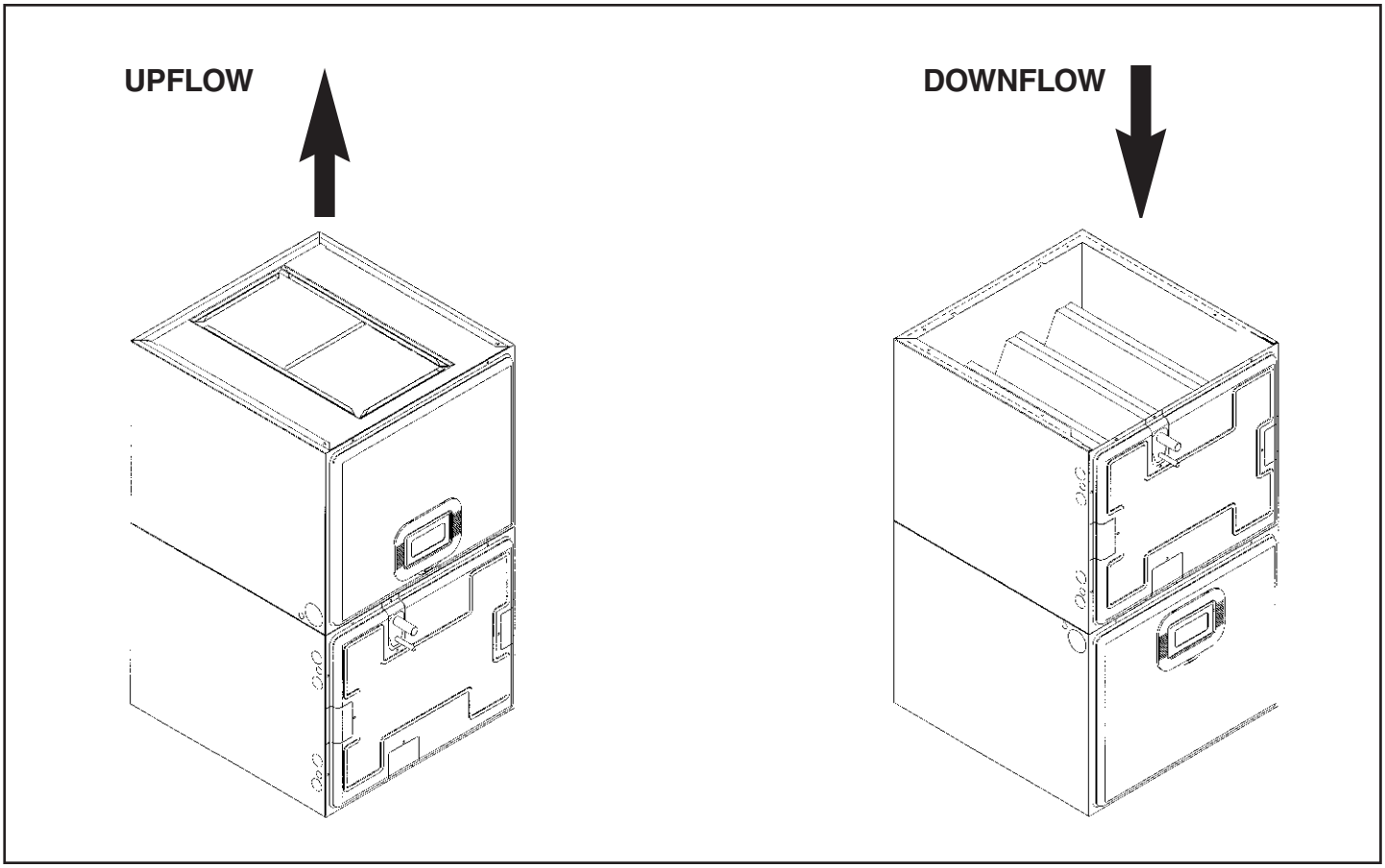

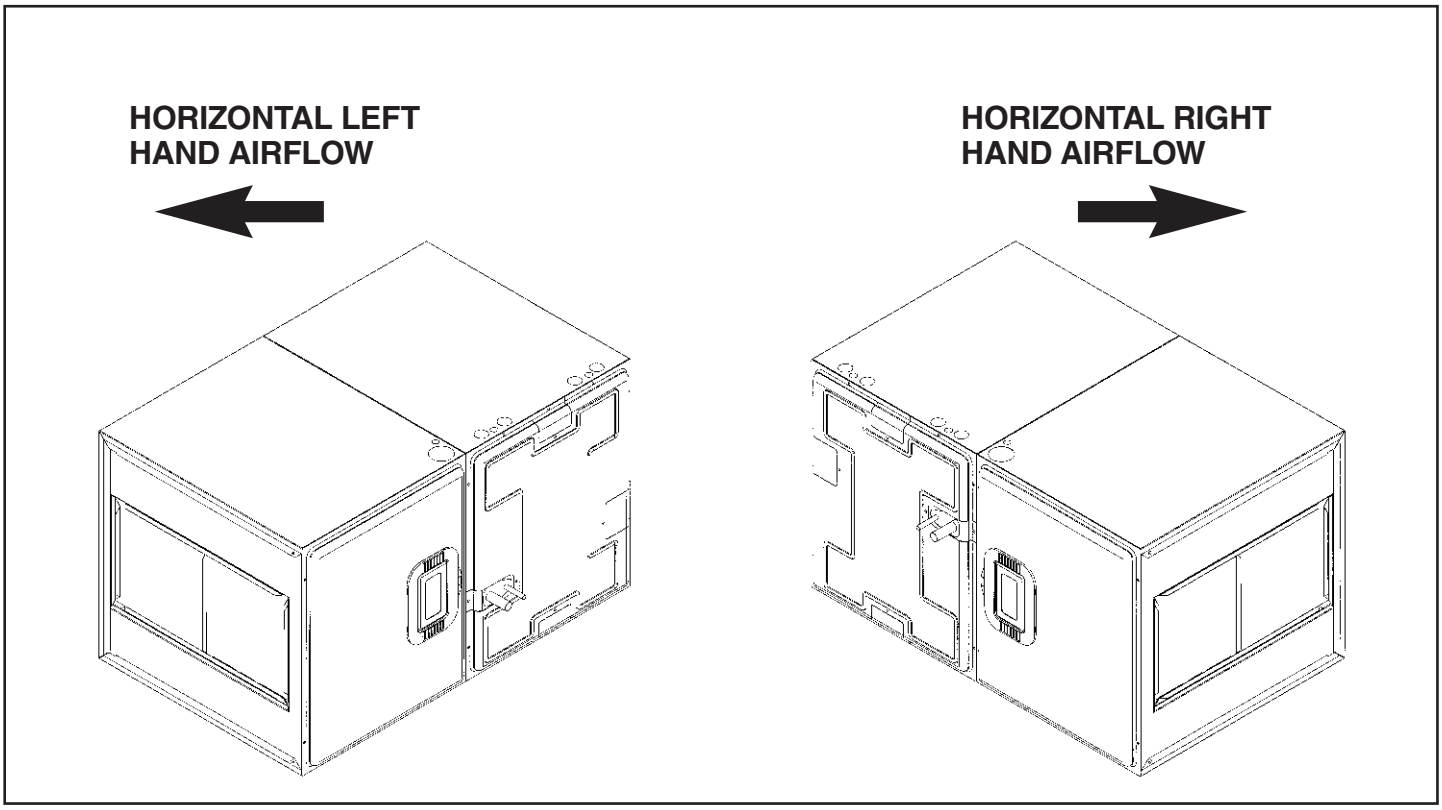

NOTE: Coil and blower section are always in a draw through configuration.

Airflow Performance

Airflow performance data is based on cooling performance with wet coil and filter in place. Select performance table for appropriate unit size, voltage and number of electric heaters to be used. Make sure external static applied to unit allows operation within the minimum and maximum limits shown in table below for both cooling and electric heat operation. For optimum blower performance, operate the unit in the .1 to .2 in. W.C. external static range. In general, the indoor motor speed tap should be as shown in table for the appropriate cooling capacity shown. Always check to make sure proper motor speed tap is connected as units are shipped from the factory connected for high speed operation.

High speed if dip switch #1 is “off”. Low speed if dip switch #1 is “on”.

Airflow Operating Limits

Model Cabinet Size	17		21		24		25	
Cooling BTUH x 1,000 Cooling Tons Nominal	-018 1.5	-024 2	-030 2.5	-036 3	-042 3.5	-048 4	-060 5	-060 5
Heat Pump or Air Conditioning Maximum Heat/Cool CFM [L/s] (37.5 CFM [18 L/s]/1,000 BTUH) (450 CFM [212 L/s]/Ton Nominal)	675 [319]	900 [425]	1125 [531]	1350 [637]	1575 [743]	1800 [850]	2025 [956]	2250 [1062]
Heat Pump or Air Conditioning Nominal Heat/Cool CFM [L/s] (33.3 CFM [16 L/s]/1,000 BTUH) (400 CFM [189 L/s]/Ton Nominal)	600 [283]	800 [378]	1000 [472]	1200 [566]	1400 [661]	1600 [755]	1800 [850]	2000 [944]
Heat Pump or Air Conditioning Minimum Heat/Cool CFM [L/s] (30.0 CFM [14 L/s]/1,255 BTUH) (360 CFM [170 L/s]/Ton Nominal)	540 [255]	720 [340]	900 [425]	1080 [510]	1260 [595]	1440 [680]	1620 [765]	1800 [850]
Blower Motor Speed	Low	High	Low	High	Low	High	Low	High
Maximum KW Electric Heating & Minimum Electric Heat CFM [L/s]	11 560 [264]	11 560 [264]	14 900 [425]	14 900 [425]	18 1220 [576]	18 1220 [576]	21 1460 [689]	21 1460 [689]
Maximum Electric Heat Rise °F [°C]	85 [29]	85 [29]	70 [21]	70 [21]	65 [18]	65 [18]	65 [18]	65 [18]

[ ] Designates Metric Conversions

Airflow Performance Data

Model Cabinet Size	Electric Heaters	Blower Motor		CFM [L/s] (Watts)/External Static Pressure—Inches W.C. [kPa]									
		Nominal Speed	Volts	.10 [.02]	.20 [.05]	.30 [.07]	.40 [.10]	.50 [.12]	.60 [.15]	.70 [.17]	.80 [.20]	.90 [.23]	1.0 [.25]
-17	None	Low	240	604 [285] (51)	614 [290] (67)	617 [291] (81)	616 [291] (94)	611 [288] (102)	605 [286] (120)	600 [283] (132)	596 [281] (146)	595 [281] (160)	599 [283] (176)
	3 (Max.)	Low	240	604 [285] (57)	608 [287] (70)	608 [287] (83)	606 [286] (97)	602 [284] (111)	596 [281] (126)	591 [279] (142)	587 [277] (157)	585 [276] (173)	585 [276] (188)
	None	Low	208	608 [287] (52)	612 [289] (66)	613 [289] (79)	611 [288] (92)	609 [287] (105)	605 [286] (117)	601 [284] (130)	598 [282] (143)	597 [282] (156)	597 [282] (170)
	3 (Max.)	Low	208	598 [282] (52)	600 [283] (66)	600 [283] (80)	599 [283] (95)	596 [281] (110)	593 [280] (125)	589 [278] (140)	585 [276] (155)	581 [274] (169)	578 [273] (183)
	None	High	240	803 [379] (107)	802 [379] (123)	802 [379] (140)	804 [379] (158)	807 [381] (177)	810 [382] (196)	811 [383] (215)	811 [383] (233)	809 [382] (249)	803 [379] (264)
	3 (Max.)	High	240	790 [373] (104)	786 [371] (131)	786 [371] (140)	787 [371] (160)	790 [373] (180)	793 [374] (201)	794 [375] (222)	793 [374] (241)	788 [372] (258)	779 [368] (272)
	None	High	208	794 [375] (100)	792 [374] (118)	794 [375] (136)	798 [377] (154)	802 [379] (173)	806 [380] (191)	809 [382] (210)	810 [382] (227)	806 [380] (242)	798 [377] (257)
	3 (Max.)	High	208	781 [369] (103)	783 [370] (121)	785 [370] (140)	787 [377] (159)	789 [372] (177)	790 [373] (196)	789 [372] (214)	786 [371] (232)	780 [368] (248)	772 [364] (265)
-21	None	Low	240	1009 [476] (126)	1011 [477] (144)	1010 [477] (162)	1008 [476] (180)	1004 [474] (199)	1000 [472] (219)	997 [471] (239)	997 [471] (260)	999 [471] (282)	1005 [474] (304)
	4 (Max.)	Low	240	987 [466] (127)	985 [465] (148)	982 [463] (168)	978 [462] (189)	974 [460] (210)	970 [458] (232)	967 [456] (255)	965 [455] (278)	966 [456] (303)	968 [457] (329)
	None	Low	208	993 [469] (117)	990 [467] (133)	988 [466] (150)	987 [462] (169)	986 [465] (189)	986 [465] (209)	986 [465] (231)	986 [465] (251)	986 [465] (272)	985 [465] (293)
	4 (Max.)	Low	208	981 [463] (122)	974 [460] (140)	969 [457] (161)	967 [456] (183)	965 [455] (205)	964 [455] (229)	963 [454] (252)	962 [454] (274)	959 [453] (295)	953 [450] (315)
	None	High	240	1196 [564] (193)	1199 [566] (216)	1201 [567] (240)	1203 [568] (265)	1205 [569] (290)	1206 [569] (316)	1208 [570] (341)	1209 [571] (366)	1210 [571] (390)	1211 [572] (413)
	4 (Max.)	High	240	1185 [559] (208)	1169 [552] (222)	1166 [550] (246)	1172 [553] (276)	1181 [557] (309)	1190 [562] (343)	1192 [563] (373)	1184 [559] (396)	1161 [548] (409)	1119 [528] (409)
	None	High	208	1171 [553] (181)	1171 [553] (201)	1174 [554] (224)	1179 [556] (249)	1184 [559] (275)	1189 [561] (301)	1193 [563] (327)	1195 [564] (351)	1192 [563] (373)	1185 [559] (390)
	4 (Max.)	High	208	1153 [544] (191)	1146 [541] (210)	1149 [542] (235)	1156 [546] (265)	1164 [549] (296)	1171 [553] (327)	1173 [554] (355)	1165 [550] (377)	1145 [540] (392)	1109 [523] (396)
-24*	None	Low	240	1423 [672] (221)	1422 [671] (245)	1419 [670] (271)	1415 [668] (298)	1410 [665] (326)	1406 [664] (355)	1401 [661] (386)	1397 [659] (417)	1394 [658] (449)	1392 [657] (481)
	5 (Max.)	Low	240	1420 [670] (242)	1416 [668] (272)	1413 [667] (306)	1411 [666] (342)	1408 [665] (381)	1404 [663] (421)	1400 [661] (460)	1395 [658] (498)	1390 [656] (534)	1383 [653] (565)
	None	Low	208	1406 [664] (207)	1397 [659] (234)	1393 [657] (261)	1393 [657] (289)	1394 [658] (317)	1394 [658] (345)	1390 [656] (373)	1380 [651] (401)	1362 [643] (429)	1334 [630] (457)
	5 (Max.)	Low	208	1409 [665] (232)	1407 [664] (264)	1406 [664] (297)	1405 [663] (331)	1403 [662] (367)	1400 [661] (402)	1395 [658] (436)	1389 [656] (469)	1380 [651] (500)	1369 [646] (528)
	None	High	240	1600 [755] (305)	1610 [780] (343)	1619 [764] (383)	1623 [766] (422)	1623 [766] (459)	1617 [763] (493)	1604 [757] (522)	1582 [747] (544)	1550 [732] (559)	1508 [712] (565)
	5 (Max.)	High	240	1580 [746] (329)	1600 [755] (391)	1611 [760] (441)	1611 [760] (481)	1601 [756] (511)	1583 [747] (534)	1556 [734] (550)	1522 [718] (560)	1449 [684] (567)	1430 [675] (570)
	None	High	208	1588 [749] (295)	1590 [750] (333)	1594 [752] (372)	1597 [754] (409)	1598 [754] (444)	1594 [752] (476)	1584 [748] (502)	1566 [739] (523)	1539 [726] (537)	1500 [708] (542)
	5 (Max.)	High	208	1572 [742] (321)	1589 [750] (365)	1597 [754] (407)	1597 [754] (447)	1588 [749] (483)	1570 [741] (513)	1543 [728] (537)	1508 [712] (553)	1465 [691] (560)	1413 [667] (556)
-25*	None	Low	240	1808 [853] (288)	1814 [856] (322)	1817 [858] (356)	1817 [858] (390)	1814 [856] (424)	1810 [854] (459)	1804 [851] (493)	1797 [848] (527)	1791 [845] (560)	1786 [843] (593)
	5 (Max.)	Low	240	1775 [838] (319)	1776 [838] (353)	1775 [838] (388)	1772 [836] (424)	1767 [834] (460)	1762 [832] (497)	1757 [829] (534)	1753 [827] (573)	1750 [826] 612)	1748 [825] (651)
	None	Low	208	1806 [852] (285)	1802 [850] (317)	1797 [848] (349)	1793 [846] (381)	1798 [849] (413)	1785 [842] (445)	1781 [841] (477)	1776 [838] (509)	1772 [836] (541)	1768 [834] 573)
	5 (Max.)	Low	208	1795 [847] (325)	1780 [840] (349)	1768 [834] (377)	1760 [831] (410)	1753 [827] (446)	1747 [824] (483)	1742 [822] (521)	1736 [819] (558)	1731 [817] (594)	1723 [813] (627)
	None	High	240	1988 [938] (378)	2001 [944] (423)	2009 [948] (465)	2013 [950] (505)	2013 [950] (544)	2011 [949] (582)	2008 [948] (618)	2004 [946] (654)	2000 [944] (690)	1997 [942] (726)
	5 (Max.)	High	240	1978 [934] (431)	1982 [935] (472)	1983 [936] (512)	1981 [935] (552)	1978 [934] (592)	1974 [932] (634)	1970 [930] (678)	1968 [929] (726)	1967 [928] (778)	1965 [927] (814)
	None	High	208	2000 [944] (382)	2001 [944] (419)	2002 [945] (457)	2002 [945] (495)	2001 [944] (534)	2000 [944] (573)	1999 [943] (611)	1998 [943] (649)	1996 [942] (686)	1994 [941] (722)
	5 (Max.)	High	208	2002 [945] (437)	1995 [942] (475)	1991 [940] (515)	1989 [939] (556)	1987 [938] (599)	1986 [937] (641)	1983 [936] (683)	1978 [934] (722)	1971 [930] (759)	1836 [866] (716)

WARNING: Observe airflow operating limits. Do not operate above 1.0 in. W.C. system external static.

*.10 & .15 In. W.C. less static pressure is available on (-)BHK-24 and (-)BHK-25 unit respectively when two indoor coils are installed (one coil shown above).

[ ] Designates Metric Conversions

Blower Motor Electrical Data

Model Size/Elec. Designation	Voltage	Phase	Hertz	HP [W]	RPM	Speeds	Circuit Amps.	Minimum Circuit Ampacity	Maximum Circuit Protector
17J	208/240	1	60	1/3 [249]	300-1100	2	3.0/2.8	3.8/3.5	15
21J	208/240	1	60	1/2 [373]	300-1100	2	5.0/4.3	6.3/5.4	15
24J	208/240	1	60	1/2 [373]	300-1100	2	5.0/4.3	6.3/5.4	15
25J	208/240	1	60	3/4 [559]	300-1100	2	6.6/6.0	8.3/7.5	15

Electric Heat Electrical Data

Model Elec./KW Designation	Heater KW	PH/HZ	Heater No./KW	Type Supply Circuit Single Circuit Multiple Circuit	Circuit Amps.	Minimum Circuit Ampacity	Maximum Circuit Protector
	Volts 208/240						
J06	3.7/4.9	1/60	2/2.5	Single Circuit	24.3/26.3	30.4/33.0	35/35
J07	5.3/7.0	1/60	2/3.5	Single Circuit	31.9/35.2	39.9/43.0	40/45
J11	7.5/10.0	1/60	3/3.3	Single Circuit	42.7/47.7	53.4/59.6	60/60
J14	10.5/14.0	1/60	4/3.5	Single Circuit	57.2/64.3	71.5/80.4	80/90
				Multiple Ckt. 1	31.9/35.2	39.9/44.0	40/45
				Multiple Ckt. 2	25.3/29.2	31.6/36.5	35/40
J18	13.2/17.5	1/60	5/3.5	Single Circuit	69.8/78.9	87.3/98.6	90/100
				Multiple Ckt. 1	31.9/35.2	39.9/44.0	40/45
				Multiple Ckt. 2	37.9/43.8	47.4/54.7	50/60
J21	15.0/20.0	1/60	6/3.3	Single Circuit	78.8/89.4	98.6/111.7	100/125
				Multiple Ckt. 1	42.7/47.7	53.4/59.6	60/60
				Multiple Ckt. 2	36.1/41.7	45.2/52.1	50/60

Supply circuit protective devices may be fuses or "HACR" type circuit breakers. Largest motor load is included in single circuit and circuit 1 multiple circuit. If non-standard fuse size is specified, use next size larger standard fuse size.

[ ] Designates Metric Conversions

Copper Wire Size—AWG. (3% Voltage Drop)

SUPPLY WIRE LENGTH FEET [m]																	
200 [61]	12	10	8	8	8	6	6	6	4	4	3	3	2	2	1	0	00
150 [46]	12	10	10	10	8	8	6	6	6	4	4	3	3	2	1	0	00
100 [30]	14	12	10	10	8	8	8	6	6	4	4	3	3	2	1	0	00
50 [15]	14	12	10	10	8	8	8	6	6	4	4	3	3	2	1	0	00
	15	**20**	**25**	**30**	**35**	**40**	**45**	**50**	**60**	**70**	**80**	**90**	**100**	**110**	**125**	**150**	**175**
	SUPPLY CIRCUIT AMPACITY																

NOTE: Wire based on copper conductors 75°C minimum rating. For more than 3 conductors in a raceway or cable, see N.E.C. for derating the ampacity of each conductor.

Combustible Floor Base for Downflow Installations

Model Cabinet Size	Combustible Floor Base Model Number	Opening Front of Unit "W" Width-Inches [mm]	Opening Side of Unit "D" Depth-Inches [mm]
-17 -21 -24/-25	RXBB-AA	14 3/8" [365]	20 5/8" [524]

[ ] Designates Metric Conversions

Combustible Floor Base for Downflow Installations (cont.)

ACCESSORIES—KITS—PARTS

- **Combustible Floor Base RXBB-AA** for downflow applications.
- **Jumper Bar Kit 3 Ckt. to 1 Ckt. RXBJ-A31** is used to convert single phase multiple three circuit units to a single supply circuit. Kit includes cover and screw for line side terminals.
- **Note:** No jumper bar kit is available to convert three phase multiple two circuit units to a single supply circuit.
- If a factory supplied jumper bar for single supply circuit is removed from unit to make multiple supply circuits, the line side of the circuit breakers must be covered with finger safe covers. Each circuit breaker pole must be covered with a finger safe cover.
- **FInger Safe Circuit Breaker Cover**—Part Number 45-23203-01. One is required for each circuit breaker pole, if jumper bar is removed to provide multiple supply circuits.
- **Horizontal Drain Pan Model RXBD-CB:** all unit sizes. x50 = Bulk Pack.
- **RXBM-AA06**—Auxiliary horizontal drain pan. Fits all models except (-)BHB-24 & 25 with double indoor coils (RCGJ-61, RCHJ-51 or RCHJ-61).
- **Replacement Filters**

Model Cabinet Size	Filter Size In. [mm]	Part Number
-17	16.25 x 21 [413 x 533]	54-23217-02
-21	19.75 x 21 [502 x 533]	54-23217-03
-24	23.25 x 21 [591 x 533]	54-23217-04
-25	23.25 x 21 [591 x 533]	54-23217-04

[ ] Designates Metric Conversions

Before proceeding with installation, refer to installation instructions packaged with each model, as well as complying with all Federal, State, Provincial, and Local codes, regulations, and practices.

RHEEM
AIR CONDITIONING
DIVISION

5600 Old Greenwood Road, Fort Smith, Arkansas 72908

"In keeping with its policy of continuous progress and product improvement, Rheem reserves the right to make changes without notice."

PRINTED IN U.S.A. 10-01 DC

FORM NO. H11-516 REV. 1
Supersedes Form No. H11-516 Rev. 0