SUBMITTAL COVER SHEET

PROJECT NAME _____

LOCATION _____

ARCHITECT _____

ENGINEER _____

CONTRACTOR _____

SUBMITTED BY _____ DATE _____

UNIT SUMMARY

Quantity						
Unit Designation						
Model No.						
Total Cooling						
Sensible Cooling						
Air Ent. Evaporator						
Air Lvg. Evaporator						
Heating Input						
Heating Output						
CFM/ESP						
EER/SEER						
Electrical						
Minimum Ampacity						
Min.-Max. Breaker						
Net Unit Weight						
Accessory						
Catalog Form Number						

ACCESSORIES:

NOTES:

SUBMITTAL SHEET FOR HEAT PUMP AIR HANDLERS AND FAN COIL UNIT: RBHP

- Models featuring R-22 Refrigerant
- Models featuring Earth-Friendly R-410A Refrigerant
- Models featuring Electric Heat without Indoor Cooling Coil

JOB NAME _____ LOCATION _____

CONTRACTOR _____ ORDER NO. _____

ENGINEER _____ SUBMITTED FOR ☐ APPROVAL ☐ RECORD

DATE _____ OUTDOOR UNIT MODEL NO. _____

MODEL NO. _____ INDOOR COIL MODEL NO. _____

UNIT DATA

COOLING PERFORMANCE

TOTAL CAPACITY*..... _____ MBH [kW]

SENSIBLE CAPACITY*..... _____ MBH [kW]

OUTDOOR DESIGN TEMP. .... _____ °F [°C] DB

TOTAL SUPPLY AIR ..... _____ CFM [L/s]

TEMP. OF AIR ENTERING EVAPORATOR COIL..... _____ °F [°C] DB

_____ °F [°C] WB

POWER INPUT REQUIREMENT ..... _____ kW
(*uses blower motor heat)

HEATING PERFORMANCE

TOTAL CAPACITY*..... _____ MBH [kW]

OUTDOOR DESIGN TEMP. .... _____ °F [°C] DB

TEMP. OF AIR ENTERING EVAPORATOR COIL..... _____ °F [°C] DB

ELECTRIC HEAT CAPACITY ..... _____ kW

POWER INPUT REQUIREMENT ..... _____ kW
(*uses blower motor heat)

SUPPLY AIR BLOWER PERFORMANCE

TOTAL AIR SUPPLY ..... _____ CFM [L/s]

TOTAL RESISTANCE EXTERNAL TO UNIT..... _____ IWG

BLOWER SPEED ..... _____ RPM

POWER OUTPUT REQUIREMENT .. _____ BHP

MOTOR RATING ..... _____ HP [W]

POWER INPUT REQUIREMENT ..... _____ kW

ELECTRICAL DATA

POWER SUPPLY ..... ____/____/____

TOTAL UNIT AMPACITY..... _____ AMPS

MINIMUM WIRE SIZE ..... _____ AWG

MAXIMUM OVERCURRENT DEVICE FUSES/HACR BREAKER ..... _____ AMPS

CLEARANCES

SERVICE ACCESS FRONT 24" [609.6 mm]

FEATURES FOR RBHP AIR HANDLERS

- Quiet, efficient X-13 motor technology providing nominal airflow to 0.5 inch [12 kPa] of external static pressure.
- Field selectable airflow to meet the requirements of particular applications.
- Low continuous speed fan.
- **The most compact unit design available.**
- Attractive pre-painted cabinet exterior.
- Rugged double wall steel cabinet construction, designed for added strength and versatility.
- .5" foil faced insulation mechanically retained in blower compartment.
- Four leg rubber insulated wire motor mount.
- Circuit breakers standard on models above 11 kW and optional on models with 11 kW or less.
- Models supplied with circuit breakers meet UL and cUL requirements as a service disconnect switch.
- Provisions for field electrical connections from either side of air handler cabinet.
- Tab lock blower housing with integrated electric heaters, controls, motor and blower. Slide out design for service and maintenance convenience.
- Exclusive dependable Incoloy sheath type electric heating elements located in the blower housing provide mixed warm air.
- Field convertible for vertical upflow, vertical downflow, horizontal left hand or right hand air supply.
- Common combustible floor base accessory fits all model sizes when required for downflow installations on combustible floors.
- Durable framed cleanable air filter provided as standard in unit filter rack.
- Factory-Installed MultiFlex® indoor coil design provides low air side pressure drop, high performance and extremely compact size. All coils come with PVC condensate elbow standard.
- All indoor coils have copper tubing and aluminum fins.
- Molded polymer corrosion resistant condensate drain pan is provided on all indoor coils.
- Both supply and return duct flanges provided as standard on air handler cabinet.
- Connection points for both high voltage and low voltage control wiring inside air handler cabinet.
- Concentric knockouts are provided for power connection to cabinet. Installer may pull desired hole size up to 2 inches [51 mm] for 1½ inch [38 mm] conduit.
- Patented watt restrictor on heat pump models to control electric heat during heating operation.
- Internal checked TX valves are used on the RCHJ & RCHL Heat Pump indoor coil for more quiet refrigerant metering.
- Front refrigerant and drain connections.
- Factory limited warranty on parts as follows:

Indoor Coil leaks caused by factory defects .....Five (5) Years
Electric Heating Element .....Five (5) Years
Any Other Part.....Five (5) Years

c UL us LISTED

ISO 9001:2000
Certificate Number: 30064

FIELD INSTALLED ACCESSORIES

Combustible Floor Base RXBB-AA ..... ☐
Jumper Bar Kit 3 Ckt. to 1 Ckt. RXBJ-A31 ..... ☐
Jumper Bar Kit: 2 Ckt to 1 Ckt. RXBJ-A21 .... ☐
Finger Safe Circuit Breaker Cover ..... ☐

Replacement Filters ..... ☐
Auxiliary Horizontal Drain Pan RXBM-AA06.... ☐
Horizontal Drain Pan Model RXBD-CB ..... ☐

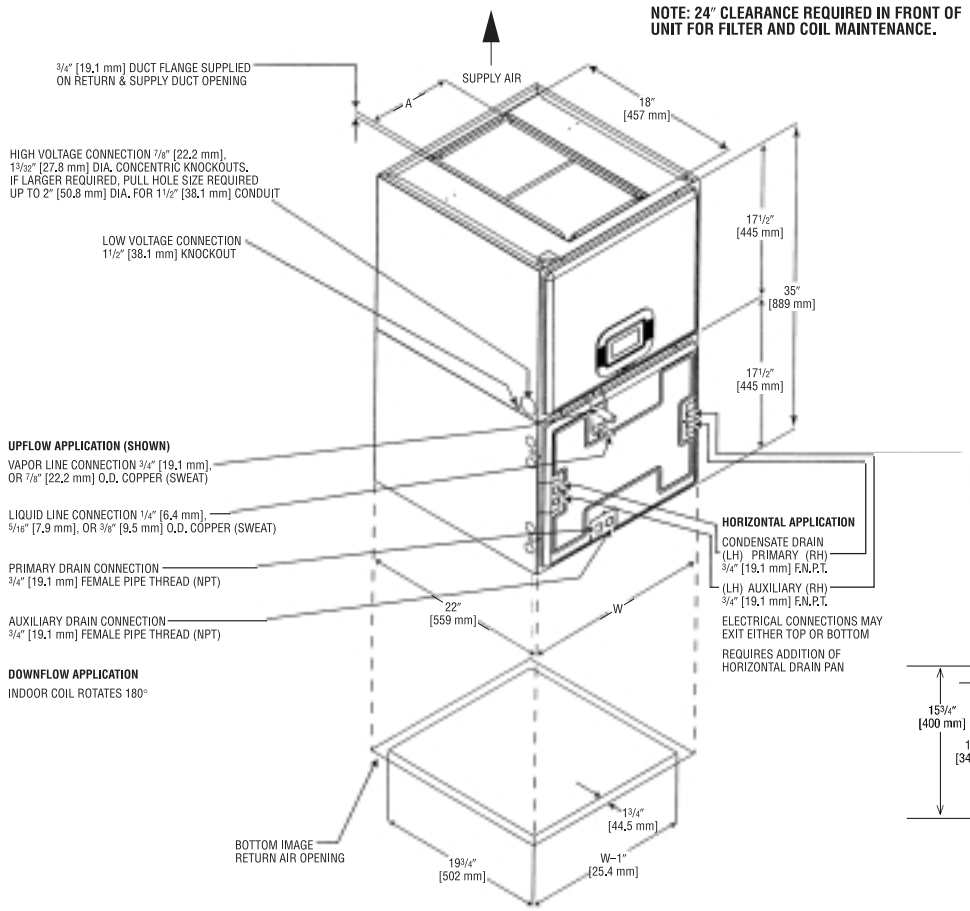

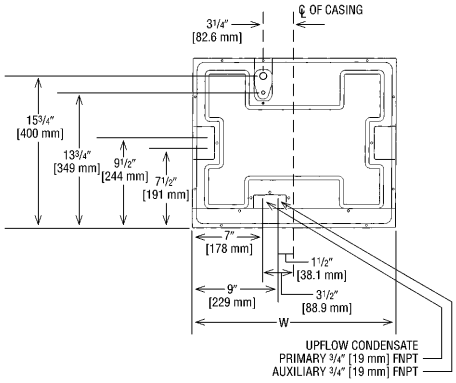

[ ] Designates Metric Conversions
( ) Designates Unit with Double Coil Cabinet

Dimensions for Front Connection Coils. For "W", see Unit Dimensions. (Single Indoor Coil Units Only)

Unit Dimensions & Weights

Model Number Cabinet Size	Unit Width "W" In. [mm]	Supply Duct "A" In. [mm]	Unit Weight/Shipping Weight (Lbs.) [kg]	
			Unit With Coil (Max. KW)	Unit Without Coil (Max. KW)
17	17 1/2 [445]	7 9/16 [192]	92/99 [42/45]	66/75 [30/31]
21	21 [533]	9 7/16 [240]	109/117 [49/53]	79/87 [36/39]
24	24 1/2 [622]	11 3/4 [298]	125/134 [57/61]	88/97 [40/44]
25	24 1/2 [622]	11 3/4 [298]	125/134 [57/61]	88/97 [40/44]

Before proceeding with installation, refer to installation instructions packaged with each model, as well as complying with all Federal, State, Provincial, and Local codes, regulations, and practices.

Rheem Sales Company, Inc.
P.O. Box 17010, Fort Smith, AR 72917

"In keeping with its policy of continuous progress and product improvement, Rheem reserves the right to make changes without notice."

PRINTED IN U.S.A. 4-08 DC

FORM NO. X33-1259 REV. 2
Supersedes Form No. X33-1259 Rev. 1