SUBMITTAL COVER SHEET

PROJECT NAME _____

LOCATION _____

ARCHITECT _____

ENGINEER _____

CONTRACTOR _____

SUBMITTED BY _____ DATE _____

UNIT SUMMARY

Quantity						
Unit Designation						
Model No.						
Total Cooling						
Sensible Cooling						
Air Ent. Evaporator						
Air Lvg. Evaporator						
Heating Input						
Heating Output						
CFM/ESP						
EER/SEER						
Electrical						
Minimum Ampacity						
Min.-Max. Breaker						
Net Unit Weight						
Accessory						
Catalog Form Number						

ACCESSORIES:

NOTES:

SUBMITTAL SHEET FOR PACKAGE AIR CONDITIONER UNITS: RLNL-B WITH CAPACITIES FROM 6-12.5 TONS [21.1-44.0 kW]

R-410A
earth friendly refrigerant

JOB NAME _____
CONTRACTOR _____
ENGINEER _____
LOCATION _____
ORDER NO. _____
SUBMITTED FOR ☐ APPROVAL ☐ RECORD
SUBMITTED BY _____
DATE _____
UNIT DESIGNATION _____
MODEL NO. _____

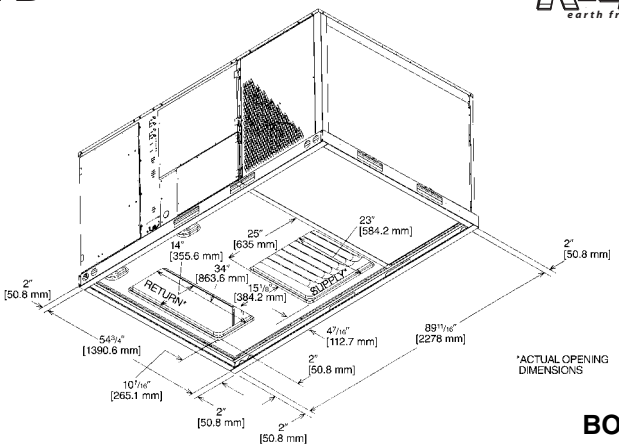

BOTTOM VIEW

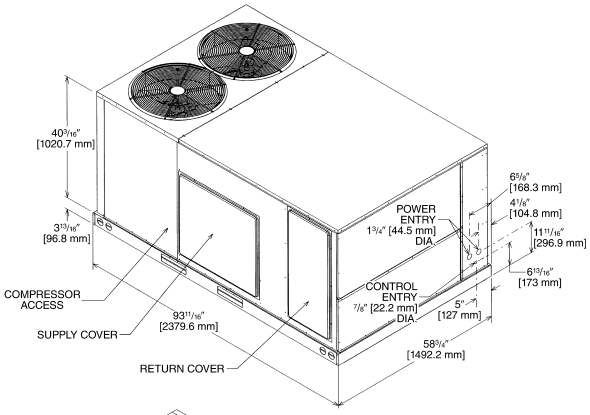

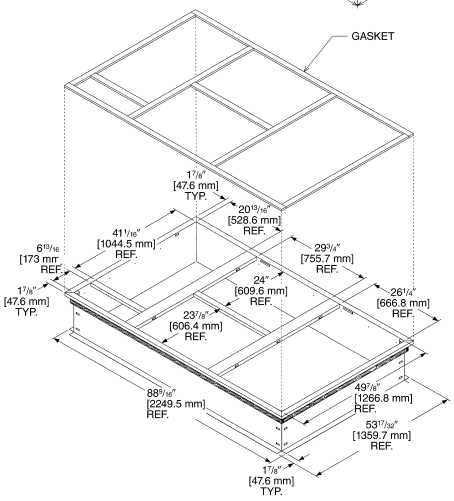

ROOFCURB INSTALLATION

Roofcurb Includes Insulation Panels

[ ] Designates Metric Conversions

UNIT DATA

COOLING PERFORMANCE

TOTAL CAPACITY* ..... _____ MBH
SENSIBLE CAPACITY* ..... _____ MBH
EFFICIENCY (at ARI) ..... _____ EER
PART LOAD EFFICIENCY ..... _____ IPLV
AMBIENT DB TEMP..... _____ °F
ENTERING DB TEMP ..... _____ °F
ENTERING WB TEMP ..... _____ °F
LEAVING DB TEMP ..... _____ °F
LEAVING WB TEMP ..... _____ °F
TOTAL POWER INPUT ..... _____ kW
ELEVATION ..... _____ FT
SOUND POWER ..... _____ DBELS

HEATING PERFORMANCE

ELECTRIC HEAT CAPACITY ..... _____ kW

SUPPLY AIR BLOWER PERFORMANCE

SUPPLY AIR..... _____ CFM [L/s]
OUTSIDE AIR..... _____ CFM [L/s]
EXTERNAL STATIC PRESSURE ..... _____ IWG
DUCT CONNECTION LOCATION ..... _____
BLOWER SPEED ..... _____ RPM
MOTOR RATING ..... _____ HP [W]
BRAKE HORSEPOWER ..... _____ BHP
POWER INPUT REQUIREMENT ..... _____ kW

ELECTRICAL DATA

POWER SUPPLY..... _____ Hz
MINIMUM CIRCUIT AMPACITY..... _____ AMPS
MAXIMUM OVERCURRENT DEVICE
FUSE SIZE ..... _____ AMPS
HACR CIRCUIT BREAKER ..... _____ AMPS

DIMENSIONS & WEIGHT

HEIGHT____ IN WIDTH____ IN DEPTH ____ IN
TOTAL WEIGHT ..... _____ LBS [kg]
(including factory options)

CLEARANCES

FRONT 48" [1219 mm]	BACK 18" [457 mm]
BOTTOM 0"	TOP 60" [1524 mm]
LEFT SIDE 18" [457 mm]	36" [914 mm]
RIGHT SIDE (condenser end)	18" [457 mm]

Accredited by the RvA
ISO 9001:2000
Certificate Number: 30164

c UL us LISTED

ARI PERFORMANCE CERTIFIED

ARI PERFORMANCE CERTIFIED

ENERGY STAR PARTNER

"Proper sizing and installation of equipment is critical to achieve optimal performance. Ask your Contractor for details or visit www.energystar.gov <http://www.energystar.gov/>."

FEATURES FOR PACKAGE AIR CONDITIONER
6-12.5 TONS NOMINAL TONS [21.1-44.0 kW]

- R-410A HFC refrigerant.
- Complete factory charged, wired and run tested.
- Scroll compressors with internal line break overload and high-pressure protection.
- Single stage compressor on B072 and B085 models.
- Dual stage compressor on B090 – B150 models.
- Convertible airflow.
- TXV refrigerant metering system on each circuit (except on B072 and B085).
- High Pressure and Low Pressure/Loss of charge protection standard on all models.
- Solid Core liquid line filter drier on each circuit.
- Single slab, single pass designed evaporator and condenser coils facilitate easy cleaning for maintained high efficiencies.
- Cooling operation up to 125 degree F ambient.
- Foil faced insulation encapsulated throughout entire unit minimizes airborne fibers from the air stream.
- Hinged major access door with heavy-duty gasketing, 1/4 turn latches and door retainers.
- Slide Out Indoor fan assembly for added service convenience.
- Powder Paint Finish meets ASTMB117 steel coated on each side for maximum protection. G90 galvanized.
- One piece top cover and one piece base pan with drawn supply and return opening for superior water management.
- Forkable base rails for easy handling and lifting.
- Single point electrical connections.
- Internally sloped slide out condensate pan conforms to ASHRAE 62 standards.
- High performance belt drive motor with variable pitch pulleys and quick adjust belt system.
- Permanently lubricated evaporator, condenser and gas heat inducer motors.
- Condenser motors are internally protected, totally enclosed with shaft down design.
- 2 inch filter standard with slide out design.
- 24 volt control system with resettable circuit breakers.
- Colored and labeled wiring.
- Copper tube/Aluminum Fin coils (12 1/2 uses micro channel condenser).
- Molded compressor plug.
- Supplemental electric heat provides 100% efficient heating.

[ ] Designates Metric Conversions

ACCESSORIES

Economizers
- With Single Enthalpy ..... ☐
- With Dual Enthalpy ..... ☐
- CO_2 Sensor ..... ☐

Fresh Air Dampers
- Manual ..... ☐
- Motorized ..... ☐

- Condenser Coil Guards ..... ☐
- Roofcurbs ..... ☐
- Low Ambient Control ..... ☐
- Electric Heater Kits ..... ☐
- Concentric Diffuser ..... ☐
- Roofcurb Adapters ..... ☐
- High Pressure Control ..... ☐
- Low Pressure Control ..... ☐

NOTES

Before proceeding with installation, refer to installation instructions packaged with each model, as well as complying with all Federal, State, Provincial, and Local codes, regulations, and practices.

Rheem Sales Company, Inc.
P.O. Box 17010, Fort Smith, AR 72917

"In keeping with its policy of continuous progress and product improvement, Rheem reserves the right to make changes without notice."

PRINTED IN U.S.A. 11-08 DC FORM NO. X33-1272