High Efficiency Condensing Power DV Water Heaters

Professional Ultra High Efficiency Condensing Power Direct Vent gas water heaters are a perfect choice when indoor air quality is a concern

Efficiency

- 0.82 EF
- ENERGY STAR® rated

Performance

- FHR: Up to 93-gallons for natural and LP gas
- Recovery: 43.6 to 48.5 at a 90 degree rise, based on model

Self-Diagnostic System

- Integrated system control for easy installation and service
- Diagnostic system control can be replaced without draining the water heater

Low Emissions

- Eco-friendly burner, low NOx design

Features

- Power direct vents are an ideal choice when either indoor air quality or negative air pressure are concerns
- Two-pipe system: one pipe pulls in outside air for combustion and the other exhausts combustion gases
- 120 VAC, 60Hz, induced draft blower
- New whisper quiet blower

Innovative Technology

- Proven center flue design with submerged coil type condensing heat exchanger
- Heat exchanger is porcelain coated inside and out for increased product life

Flammable Vapor Detection System

- FVIR compliant protective
- Control system that disables the heater in the presence of flammable vapor accumulation

Flexible Venting Options

- Long venting lengths up to 60 feet
- Use 2 or 3 inch diameter PVC, ABS, or CPVC vent pipe options. (In Canada ULC S636 PVC and CPVC must be used.)
- Vertical or horizontal termination
- Concentric vent kit available

Longer Life

- Dual anode rods protect the tank from corrosion

High Altitude Compliant

- Models are certified for applications up to 9,000 feet above sea level

Plus…

- Enhanced flow brass drain valve
- Temperature and pressure relief valve included
- Low lead compliant
- Durable silicon nitride igniter (HSI)
- Inlet tube with diffuser enhances heat transfer
- Front access to condensate trap and vent pipe
- Condensate neutralizer option
- Standard replacement parts

Warranty

- 6-Year limited tank and parts warranty*

*See Residential Warranty Certificate for complete information

Units meet or exceed ANSI requirements and have been tested according to D.O.E. procedures. Units meet or exceed the energy efficiency requirements of NAECA, ASHRAE standard 90, ICC Code and all state energy efficiency performance criteria.

Professional Ultra High Efficiency Condensing Power Direct Vent

38 and 48-Gallon Capacities
Up to 40,000 Btu/h
Natural and LP Gas

LEED Points = 2

myruud.com/proclub

See dimensions chart on back.

PRINTED IN U.S.A. 09/13 WP FORM NO. PHE-101EF Rev. 1

High Efficiency Condensing Power DV Water Heaters

Specifications

DESCRIPTION			FEATURES						ROUGHING IN DIMENSIONS (SHOWN IN INCHES)										ENERGY INFO.	
TYPE	GAL. CAP.	MODEL NUMBER	GAS INPUT IN THOUS. BTU/H		RECOVERY IN G.P.H. 90° RISE		FIRST HOUR DEL. G.P.H.		HT. TO TOP OF VENT A	HT. TO TOP OF AIR INLET B	TANK HT. C	DIAM. D	HT. TO GAS CONN. E	WATER CONN. CNTR. F	HT. TO SIDE T&P VALVE G	WATER CONN. SIZE H	FRONT TO BACK I	SHIP. WT. (LBS)	ENERGY FACTOR	
			NAT.	LP	NAT.	LP	NAT.	LP											NAT.	LP
Short	38	PHE40S	40		48.5		74		60-3/8	60-1/8	51-1/16	22-1/8	14-1/8	8	44-1/4	3/4	26-11/16	220	0.82	
Short	38	PHE40SP		36		43.6		74	60-3/8	60-1/8	51-1/16	22-1/8	14-1/8	8	44-1/4	3/4	26-11/16	220		0.82
Tall	48	PHE50	40		48.5		93		68-3/4	68-5/8	59-11/16	22-1/8	14-1/8	8	52-7/8	3/4	26-11/16	250	0.82	
Tall	48	PHE50P		36		43.6		93	68-3/4	68-5/8	59-11/16	22-1/8	14-1/8	8	52-7/8	3/4	26-11/16	250		0.82

Energy Factor based on D.O.E. (Department of Energy) test procedures.

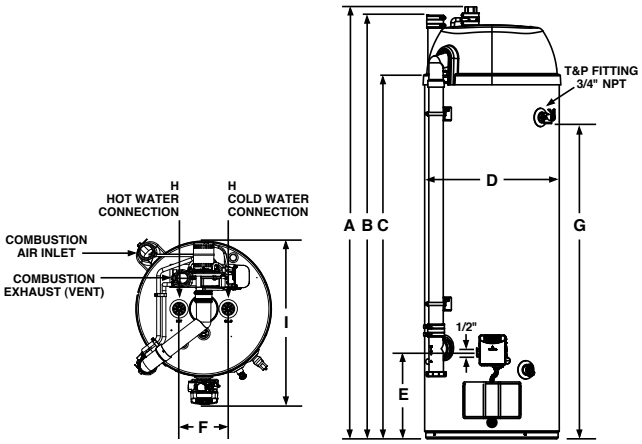

Air-Inlet and Venting Information

From Sea Level Through 5,999 ft. Above Sea Level					
Model	Vent & Combustion Air-Inlet Pipe Diameter (Inches)	Minimum Allowed Equivalent Vent & Combustion Air-Inlet Lengths – Each Pipe Run (Ft.)	Maximum Allowed Equivalent Vent & Combustion Air-Inlet Lengths – Each Pipe Run (Ft.)	Vent and Combustion Air-Inlet System Termination(s)	
PHE40S	2	7	30	90° Elbows	Concentric*
PHE40S	3	7	60	90° Elbows	Concentric*
PHE50	2	7	30	90° Elbows	Concentric*
PHE50	3	7	60	90° Elbows	Concentric*

From 6,000 ft. Above Sea Level Through 8,999 ft. Above Sea Level					
Model	Vent & Combustion Air-Inlet Pipe Diameter (Inches)	Minimum Allowed Equivalent Vent & Combustion Air-Inlet Lengths – Each Pipe Run (Ft.)	Maximum Allowed Equivalent Vent & Combustion Air-Inlet Lengths – Each Pipe Run (Ft.)	Vent and Combustion Air-Inlet System Termination(s)	
PHE40S	2	Not Allowed	Not Allowed	–	–
PHE40S	3	7	45	90° Elbows	Concentric*
PHE50	2	Not Allowed	Not Allowed	–	–
PHE50	3	7	45	90° Elbows	Concentric*

One 90° elbow is equivalent to 5 feet of straight pipe. One 45° elbow is equivalent to 2.5 feet of straight pipe.
The vent and combustion air inlet terminations are not included in the equivalency calculations.
* Use only Ruud 3 inch concentric termination kit SP20245.

In keeping with its policy of continuous progress and product improvement, Ruud reserves the right to make changes without notice.