Ruud *Achiever Plus*™ Series Two Stage Multi position Gas Furnaces

R96P- Series

96% A.F.U.E.†*
Input Rates from 60 to 100 kBTU
[17.58 to 29.31 kW]

†A.F.U.E. (Annual Fuel Utilization Efficiency) calculated in accordance with Department of Energy test procedures.
*Up to 96% A.F.U.E.

- Up to 96% residential gas furnace CSA certified
- 4 way multi-poise design
- Two stages of operation to save energy and maintain optimal comfort level.
- PlusOne™ Diagnostics 7-Segment LED all units
- PlusOne™ Ignition System – DSI for reliability and longevity
- PlusOne™ Water Management System with patented Blocked Drain Sensor
- Heat exchanger is removable for improved serviceability. Aluminized steel primary and stainless steel secondary construction provide maximum corrosion resistance and thermal fatigue reliability.
- Low profile "34 inch" cabinet ideal for space constrained installations.
- Blower Shelf design – serviceable in all furnace orientations
- Pre marked hoses – insures proper system drainage
- Vent with 2" or 3" PVC
- Replaceable Collector box
- Hemmed edges on cabinet and doors
- Quarter turn fasteners for tool less access
- Integrated control boards feature dip switches for easy system set up
- Self priming condensate trap
- Solid bottom included

TABLE OF CONTENTS

Standard & Optional Equipment 3
Physical Data & Specifications 4
Model Number Identification 5
Dimensional Data.....6
Blower Performance Data.....7
Accessories.....8
Limited Warranty 9

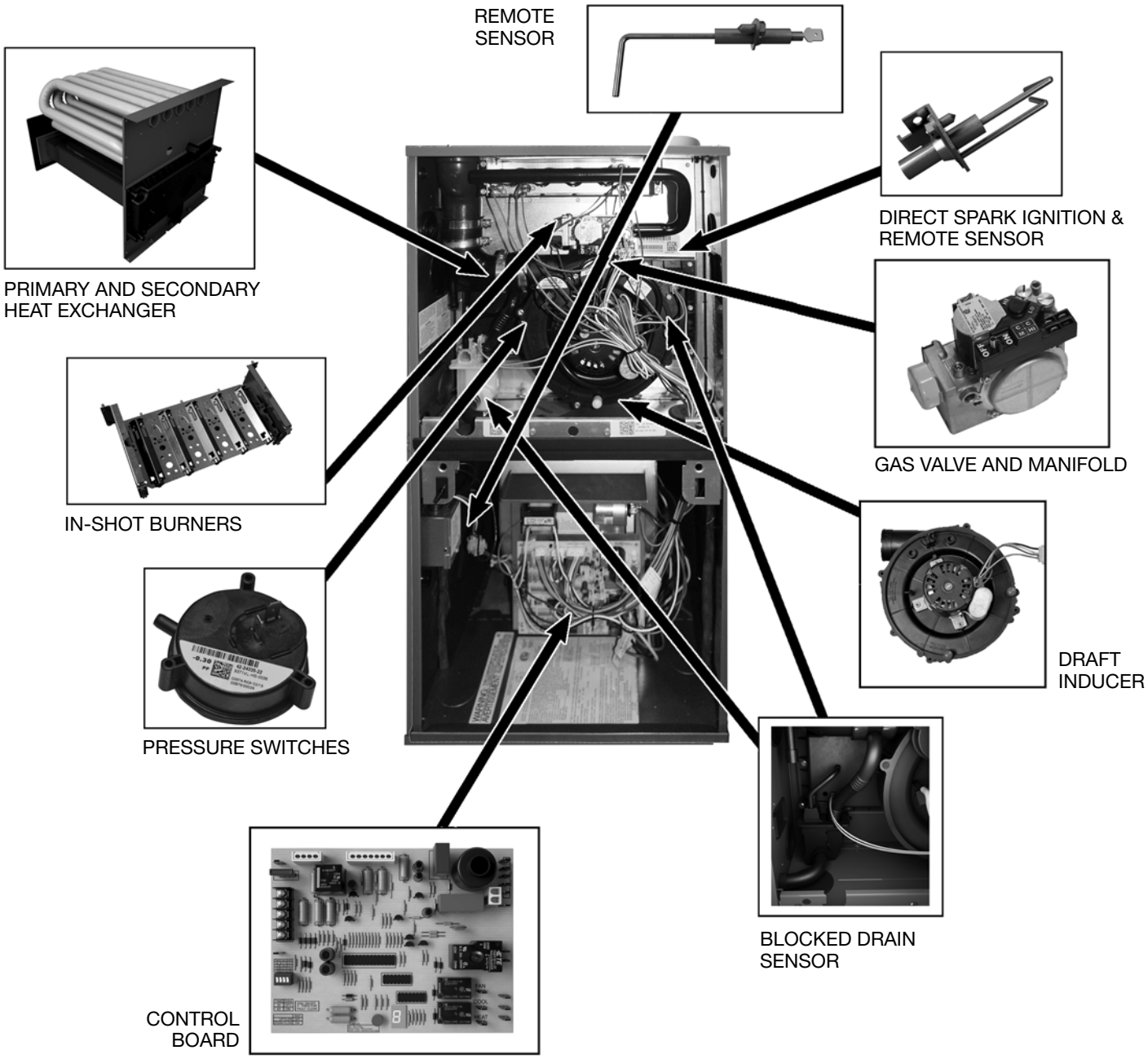

STANDARD EQUIPMENT

Completely assembled and wired; blocked drain sensor, 7 segment LED and marked hoses; heat exchanger; primary: aluminized steel, secondary: 29-4C stainless steel; 2 stage induced draft; pressure switches; redundant 2 stage main gas control; blower compartment door safety switch; solid state time on/off blower control; limit controls; manual shut-off valve; 100% safety lock out; cool fan off delay; field selectable heat fan off delay; one hour automatic retry; power and self-test diagnostics; flame sense current diagnostics; electronic air cleaner connections; twinning (built-in) features; humidifier connections; humidifier on/off delay; low speed continuous fan option; single speed option for heating and cooling applications; transformer; direct drive, multi-speed blower motor. Solid bottom. (Please note: a thermostat is not included as standard equipment.)

OPTIONAL EQUIPMENT

Side and bottom filter racks; return air cabinet for all sizes.

NOTE: Furnace is not listed for use with fuels other than natural or L.P. (propane) gas.

All models can be converted by a qualified distributor or local service dealer to use L.P. (propane) gas without changing burners. Factory approved kits must be used to convert from natural to L.P. (propane) gas and may be ordered as optional accessories from a parts distributor.

For L.P. (propane) operation, refer to Conversion Kit Index Form.

WARNING

THIS FURNACE IS NOT APPROVED
OR RECOMMENDED
FOR USE IN MOBILE HOMES

Physical Data and Specifications—Upflow Models

U.S. and Canadian Models

MODEL NUMBERS	R96PA0602317MSA	R96PA0702317MSA	R96PA085221MSA	R96PA1002521MSA
HIGH FIRE INPUT BTU/HR [kW] ①	56,000 [16.41]	70,000 [20.50]	84,000 [24.61]	98,000 [38.71]
LOW FIRE INPUT	39,200 [11.49]	49,000 [14.36]	58,800 [17.23]	68,600 [20.11]
HEATING CAPACITY BTU/HR [kW]	53,760 [15.75]	67,200 [19.68]	79,800 [23.39]	93,100 [27.28]
HIGH ALTITUDE OUTPUT 10% DERATE [kW] ②	48,384 [14.18]	60,480 [17.72]	71,820 [21.05]	83,790 [24.56]
BLOWER (D x W) [mm]	11 x 8 [279 x 203]	11 x 8 [279 x 203]	11 x 10 [279 x 254]	11 x 10 [279 x 254]
MOTOR H.P. [W]– TYPE	1/2 [373]-4-PSC	1/2 [373]-4-PSC	3/4 [559]-4-PSC	3/4 [559]-4-PSC
MOTOR FULL LOAD AMPS	6.8	6.8	8.3	8.3
HEATING SPEED–HIGH FIRE	MED-HIGH	MED-HIGH	MED-HIGH	MED-HIGH
HEATING SPEED–LOW FIRE	MED-LOW	MED-LOW	MED-LOW	MED-LOW
COOLING SPEED	HIGH	HIGH	HIGH	HIGH
MINIMUM EXT. STATIC PRESSURE (IN. W.C.) [kPa]	.20 [.050]	.23 [.057]	.28 [.070]	.28 [.070]
MAXIMUM EXT. STATIC PRESSURE (IN. W.C.) [kPa]	0.8 [0.19]	0.8 [0.19]	0.8 [0.19]	0.8 [0.19]
HEATING CFM @ .2" [.049 kPa] W.C. E.S.P. [L/s]	1139 [537]	1211 [571]	1704 [804]	1748 [825]
COOLING CFM @ .5" [.124 kPa] W.C. E.S.P. [L/s]	1232 [581]	1318 [622]	1742 [822]	1782 [841]
TEMPERATURE RISE-HIGH FIRE RANGE IN DEGREES °F [°C]	30 - 60 [17 - 33]	40 - 70 [22 - 39]	30 - 60 [17 - 33]	40 - 70 [22 - 39]
TEMPERATURE RISE-LOW FIRE RANGE IN DEGREES °F [°C]	20 - 50 [11 - 28]	30 - 60 [17 - 33]	20 - 50 [11 - 28]	30 - 60 [17 - 33]
RETURN AIR CABINETS (OPT.) RXGR- FILTER SIZE [mm]	C17B (2) 12" x 16" [305 x 406]	C17B (2) 12" x 16" [305 x 406]	C21B (2) 12" x 20" [305 x 508]	C21B (2) 12" x 20" [305 x 508]
APPROX. SHIPPING WEIGHT (LBS.) [kg]	128 [58]	132 [60]	147.5 [67]	152 [69]
AFUE ③	96.00%	96.00%	95.00%	95.00%

NOTES: All models are 115V, 60HZ, 1 phase Gas connection size for all models is 1/2" [13 mm] N.P.T.
① Installation instructions for high altitude derate.
② Canadian installations only.
③ In accordance with D.O.E. test procedures.
*S=Standard Models
NOTE: Standard model complies with California low nox requirements.

[ ] Designates Metric Conversions

Model Number Identification

R	96	P	A	—	040	2	3	17	M	S	A
Ruud	Up to 96% Efficient	Motor - PSC	Design Series A = 1st Design		Input BTU/HR 060 = 56,000 [16.41 kW] 070 = 70,000 [20.51 kW] 085 = 84,000 [24.62 kW] 100 = 98,000 [28.72 kW]	Stage - Two	Airflow 3 - Up to 3 Tons 5 - Up to 5 Tons	Cabinet Width 17 = 17.5" 21 =21.0" 24 =24.5"	Configuration - Multi-Position	S = Standard N = NO_x	Revision - Marketing (A - First Time Release)

[ ] Designates Metric Conversions

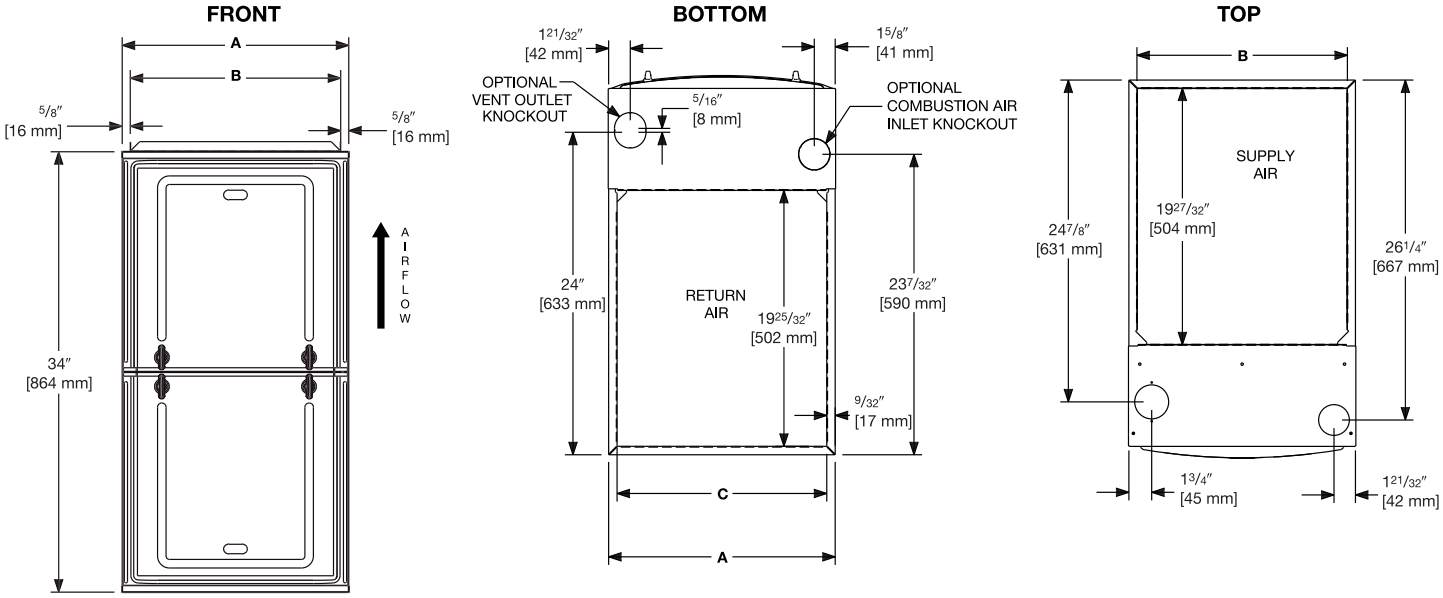

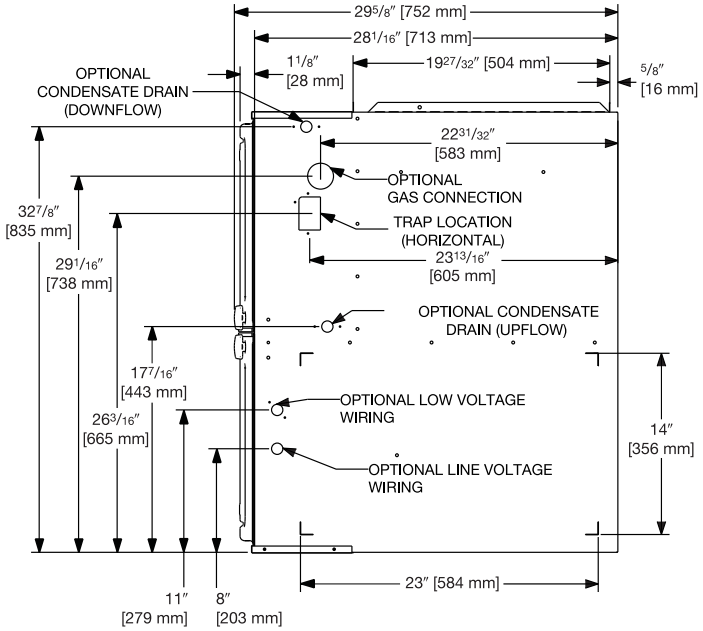

RIGHT SIDE

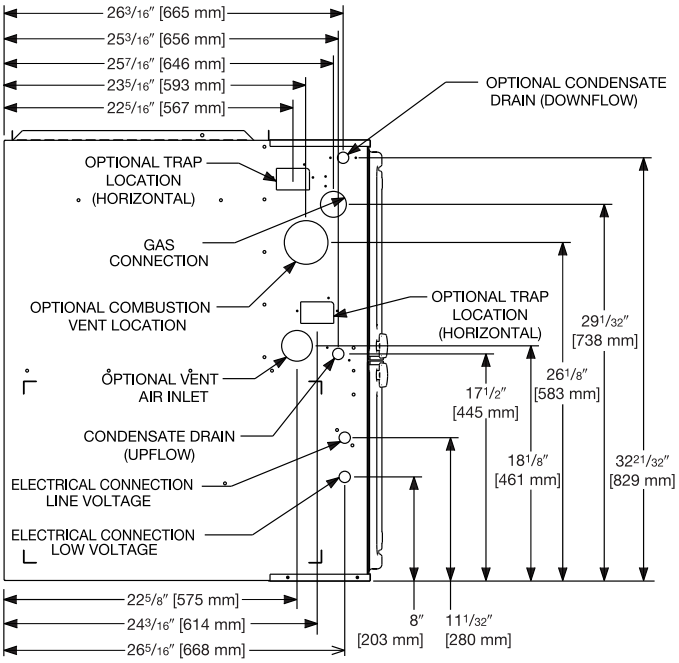

LEFT SIDE

UNIT DIMENSIONS (CLEARANCE TO COMBUSTIBLES)

MODEL R96P	LEFT SIDE	MINIMUM CLEARANCE (IN.) [mm]					SHIP WGTS.	FLANGE DIMENSIONS		
		RIGHT SIDE	BACK	TOP	FRONT	VENT		A	B	C
060	0	0	0	1 [25]	2 [51]	0	128 [58]	17 1/2 [445]	16 17/64 [413]	16 13/64 [412]
070	0	0	0	1 [25]	2 [51]	0	132 [60]	17 1/2 [445]	16 17/64 [413]	16 13/64 [412]
085	0	0	0	1 [25]	2 [51]	0	147.5 [67]	21 [533]	19 49/64 [502]	19 45/64 [500]
100	0	0	0	1 [25]	2 [51]	0	152 [69]	21 [533]	19 49/64 [502]	19 45/64 [500]

*A service clearance of at least 24" is recommended in front of all furnaces
Supply and return depicted as upflow configuration.
Flange configuration will vary depending on installation orientation.

[ ] Designates Metric Conversions

MODEL	BLOWER SIZE [mm]	MOTOR H.P. [W]	BLOWER SPEED	CFM [L/s] AIR DELIVERY EXTERNAL STATIC PRESSURE INCHES WATER COLUMN [kPa]							
				0.1 [.02]	0.2 [.05]	0.3 [.07]	0.4 [.10]	0.5 [.12]	0.6 [.15]	0.7 [.17]	0.8 [.19]
R96PA 0601317	11 x 8 [279 x 203]	1/2 [373]	LOW	830 [392]	793 [374]	755 [356]	705 [333]	654 [308]	599 [283]	544 [257]	496 [234]
			MED-LO	940 [443]	908 [428]	875 [413]	821 [387]	766 [361]	710 [333]	653 [308]	584 [275]
			MED-HI*	1168 [551]	1139 [537]	1109 [523]	1060 [500]	1010 [476]	942 [444]	874 [412]	802 [378]
			HIGH	1421 [670]	1385 [653]	1349 [636]	1291 [609]	1232 [581]	1147 [541]	1062 [501]	976 [460]
R96PA 0701317	11 x 8 [279 x 203]	1/2 [373]	LOW	852 [402]	827 [390]	802 [378]	752 [355]	701 [331]	662 [312]	623 [294]	580 [274]
			MED-LO	986 [465]	955 [450]	923 [435]	883 [417]	843 [398]	790 [373]	737 [348]	686 [324]
			MED-HI*	1238 [584]	1211 [571]	1183 [558]	1139 [537]	1094 [516]	1036 [489]	978 [461]	897 [423]
			HIGH	1493 [704]	1452 [685]	1410 [665]	1364 [643]	1318 [622]	1257 [593]	1195 [564]	1084 [511]
R96PA 0851521	11 x 10 [279 x 254]	3/4 [559]	LOW	1313 [619]	1275 [601]	1236 [583]	1221 [576]	1184 [558]	1141 [538]	1098 [518]	1053 [497]
			MED-LO	1488 [702]	1452 [685]	1415 [667]	1384 [653]	1328 [626]	1279 [603]	1229 [580]	1170 [552]
			MED-HI*	1732 [817]	1704 [804]	1676 [791]	1630 [769]	1579 [745]	1498 [707]	1417 [668]	1343 [633]
			HIGH	1983 [935]	1929 [910]	1874 [884]	1810 [854]	1742 [822]	1663 [784]	1583 [747]	1477 [697]
R96PA 1001521	11 x 10 [279 x 254]	3/4 [559]	LOW	1329 [627]	1313 [619]	1296 611]	1260 [594]	1224 [577]	1171 [552]	1117 [527]	1049 [495]
			MED-LO	1535 [724]	1498 [707]	1461 [689]	1422 [671]	1382 [652]	1325 [625]	1268 [598]	1203 [567]
			MED-HI*	1796 [847]	1748 [825]	1700 [802]	1656 [781]	1612 [760]	1536 [725]	1460 [689]	1370 [646]
			HIGH	2019 [952]	1961 [925]	1903 [898]	1843 [869]	1782 [841]	1687 [796]	1592 [751]	1489 [702]

*Factory setting for heat all grey cells are valid heating settings. Do not use speed tabs and/or static pressure which do not fall into the grey cells on this table.
NOTE: Unit tested without filters.

[ ] Designates Metric Conversions.

VENT TERMINATION KITS: =

RXGY-E02: Vertical/Horizontal Concentric Vent Termination Kit 2" Pipe (US Only)

RXGY-E02A: Vertical/Horizontal Concentric Vent Termination Kit 2" Pipe (US & Canadian)

RXGY-E03: Vertical/Horizontal Concentric Vent Termination Kit 3" Pipe (US Only)

RXGY-E03A: Vertical/Horizontal Concentric Vent Termination Kit 3" Pipe (US & Canadian)

RXGY-G02: Direct Vent Furnace Side Wall Vent 2" or 3" (US Only)

RXGY-D05: Combustion Air Drain Kit 2"

RXGY-D06: Combustion Air Drain Kit 3"

NEUTRALIZER KIT: RXGY-A01
(Replacement Cartridge 54-22120-01)

FOSSIL FUEL KIT: RXPF-F01, RXPF-F02 (TVA)

RETURN AIR PLENUM: RXGR-C17B
RXGR-C21B
RXGR-C24B

EXTERNAL BOTTOM FILTER (UPFLOW/HORIZONTAL) RACK: RXGF-CB

EXTERNAL SIDE (UPFLOW) FILTER RACK: RXGF-CD

EXTERNAL (DOWNFLOW) FILTER RACK: RXGF-CC

FILTER RACK FILTER SIZES* INCHES [mm]			
MODEL	**RXGF-CB (UPFLOW/ HORIZONTAL)**	**RXGF-CD (UPFLOW)**	**RXGF-CC (DOWNFLOW)**
R96PA060	15 3/4 x 25 [400 x 635]	15 3/4 x 25 [400 x 635]	12 x 20 [305 x 508]
R96PA070	15 3/4 x 25 [400 x 635]	15 3/4 x 25 [400 x 635]	12 x 20 [305 x 508]
R96PA085	19 1/4 x 25 [489 x 635]	15 3/4 x 25 [400 x 635]	12 x 20 [305 x 508]
R96PA100	19 1/4 x 25 [489 x 635]	15 3/4 x 25 [400 x 635]	12 x 20 [305 x 508]

*Filter racks are shipped without filters.
Filters shipped with furnace may be used or a suitable 1" [25.4 mm] filter.

INDOOR COIL CASINGS

MODEL NUMBER
RXBC-D17A1
RXBC-D21A1
RXBC-D21B1
RXBC-D24A1

FOR HIGH ALTITUDES:

NOTE: For Canadian installations only, an optional derate (manifold gas pressure reduction) method may be used to adjust the furnace for altitude. See Installation Instructions for more information. This optional method may **NOT** be used for U.S. installations. See installation instructions as appropriate orifice change is required.

L.P. CONVERSION KIT: RXGJ-FP33

RETURN AIR PLENUM KIT: RXGR-C17B
RXGR-C21B
RXGR-C24B

CONDENSATE PUMP KIT: PROSTOCK & 1PCB151TUL

DOWNFLOW/HORIZONTAL CONVERSION KIT: RXGY-CK

DOWNFLOW/HORIZONTAL LEFT ZERO CLEARANCE CONVERSION KIT: RXGY-ZK

COMBUSTIBLE FLOOR BASE: RXGC-B17
RXGC-B21
RXGC-B24

[ ] Designates Metric Conversions

GENERAL TERMS OF LIMITED WARRANTY*

Ruud will furnish a replacement for any part of this product which fails in normal use and service within the applicable period stated, in accordance with the terms of the limited warranty.

***For complete details of the Limited and Conditional Warranties, including applicable terms and conditions, contact your local contractor or the Manufacturer for a copy of the product warranty certificate.**

Conditional Parts
(Registration Required) .....Ten (10) Years
Heat Exchanger .....Limited Lifetime

In keeping with its policy of continuous progress and product improvement, Ruud reserves the right to make changes without notice.

Ruud Heating, Cooling & Water Heating • P.O. Box 17010
Fort Smith, Arkansas 72917 • www.ruud.com

Ruud Canada • 125 Edgeware Road, Unit 1
Brampton, Ontario • L6Y 0P5

Rely on Ruud.™

PRINTED IN U.S.A 07/13 QG FORM NO. G22-539