Ruud *Ultra* Series™ Two-Stage Upflow/Horizontal Gas Furnace equipped with The *Comfort Control*[2] *System*™

RGPE- Series

80% A.F.U.E.†
Input Rates 50-125 kBTU

†A.F.U.E. (Annual Fuel Utilization Efficiency) calculated in accordance with Department of Energy test procedures.

- The Ruud *Ultra* Series™ Two-Stage line of upflow/horizontal gas furnaces are designed for utility rooms, closets, alcoves, or attics. Because of the furnace's low-profile 34 inch [864 mm] height, the upflow model installed vertically can also be used to satisfy most applications that traditionally call for a horizontal furnace.
- The design is certified by CSA International.
- The *Comfort Control*[2] *System*™ provides over 28 on-board diagnostics and fault history codes by detecting system and electrical problems. "Call for Service" alert notification is sent to the thermostat to alert the homeowner of required service.
- Serial Communication Enhanced – When installed with a Serial Communicating Condensing Unit and user interface control (UHC-TST550CMMS) 500 Series thermostat this unit offers 4 or 2 wire installation, auto-configuration, and diagnostic messaging with full communicating capability.
- Patented heat exchanger, constructed of aluminized steel for the maximum in corrosion resistance and thermal fatigue reliability.
- Low profile "34 inch" [864 mm] design is lighter and easier to handle, and leaves room for optional equipment.
- Energy efficient and quiet ECM 2+ communicating motor.
- Improves cooling efficiency when matched with rated condensing unit and coil.
- Constant CFM.
- Seven segment LED for system diagnostics.
- Diagnostic history for troubleshooting.
- Dip switch settings for selectable cooling airflow.
- On-demand dehumidification terminal for improved comfort in cooling mode.
- Convertible from upflow to horizontal left or right.
- Left or right side gas and electric inlet connections.
- All models equipped with flame sensor feature, an integrated board with humidifier and electronic air cleaner hookups.
- Insulated blower compartment, a slow-open gas valve, a specially designed draft inducer motor and blower motor make it one of the quietest furnaces on the market today.
- Pre-paint galvanized steel cabinet.
- Molded permanent filter.
- Easy door removal and replacement.
- Compatible with single or two-stage thermostat. (For optimal performance, two-stage thermostat recommended.)
- A variety of cooling coils and plenums designed to use with Ruud *Ultra* Series™ Two-Stage gas furnaces are available as optional accessories.

TABLE OF CONTENTS

Standard & Optional Equipment 3
Model Features 4
Physical Data & Specifications 5
Model Number Identification 6
Dimensional Data.....7
Blower Performance Data.....8
Accessories.....9
Limited Warranty 10

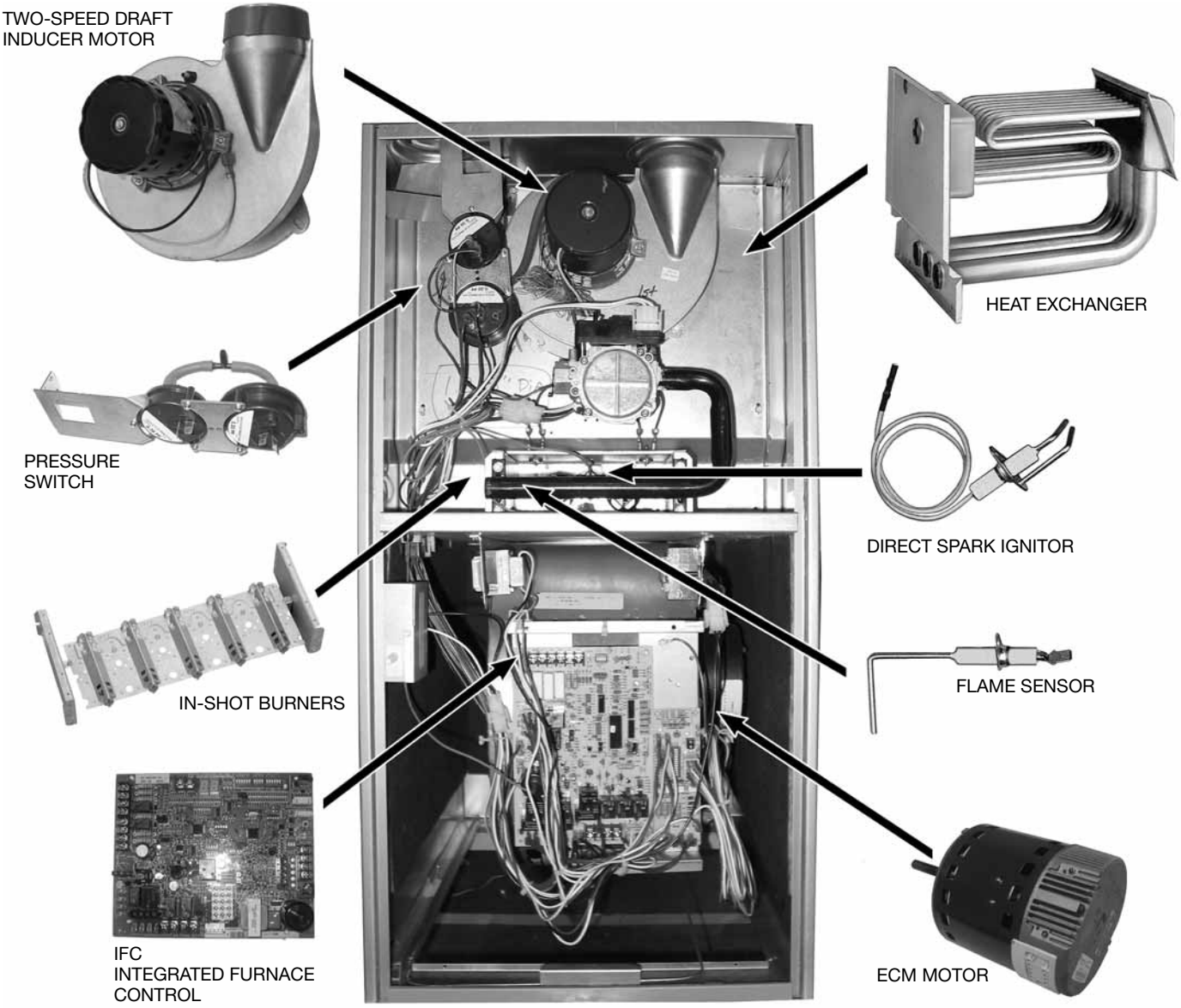

STANDARD EQUIPMENT

Completely assembled and wired; 2 speed draft inducer; high and low pressure switches; redundant 2 stage main gas control; blower compartment door safety switch; solid state time on/time off blower control; limit control; transformer; ECM blower motor. Furnaces are equipped with cooling/heating relay and transformer (50VA) ready for air conditioning applications. (Please note: a thermostat is not included as standard equipment.) Flame sensor diagnostics; fused protection (secondary).

OPTIONAL EQUIPMENT

The complete terms of limited and other warranties are available at our sales office, or through local installer.

All models can be converted by a qualified HVAC professional or local service dealer to use L.P. (propane) gas without changing burners. Factory approved kits must be used to convert from natural to L.P. (propane) gas and may be ordered as optional accessories from a Ruud parts distributor.

For L.P. (propane) operation, refer to Conversion Kit Index Form.

WARNING

THIS FURNACE IS NOT APPROVED
OR RECOMMENDED
FOR USE IN MOBILE HOMES

The *Comfort Control² System*™ Features:

- **The Ruud Dual 7-Segment LED Display easily shows system operating status codes and diagnostic codes.**
- **The Status Indication System Diagnostics feature thermostat communication capability and built-in diagnostics.** The thermostat communication capability and alerts the homeowner to any necessary service requirements. Faster, more accurate service is provided by the built-in diagnostics, by providing the HVAC professional with dependable information.

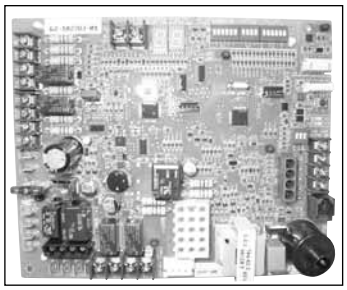

- **The fault recall feature will allow for the last six fault-codes to be displayed, and will retain these codes even if power failure occurs.**
- **In order to save time and money, replacement automotive style fuses can be utilized instead of replacing the entire control board.**

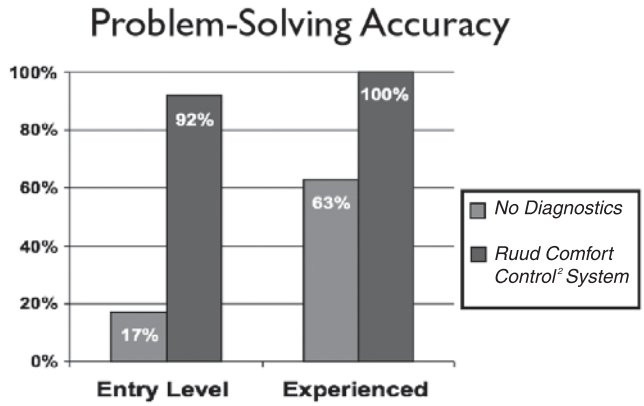

Features of the RGPE Series:

- The *Comfort Control² System*™ provides over 28 on-board diagnostics and fault history codes by detecting system and electrical problems. “Call for Service” alert notification is sent to the thermostat to alert the homeowner of required service.
- Serial Communication Enhanced – When installed with a Serial Communicating Condensing Unit and user interface control (UHC-TST550CMMS) 500 Series thermostat this unit offers 4 or 2 wire installation, auto-configuration, and diagnostic messaging with full communicating capability.
- Patented heat exchanger, constructed of aluminized steel for the maximum in corrosion resistance and thermal fatigue reliability.
- Low profile “34 inch” [864 mm] design is lighter and easier to handle, and leaves room for optional equipment.
- Energy efficient and quiet ECM 2+ communicating motor.
- Improves cooling efficiency when matched with rated condensing unit and coil.
- Constant CFM.
- Seven segment LED for system diagnostics.
- Diagnostic history for troubleshooting.
- Dip switch settings for selectable cooling airflow.
- On-demand dehumidification terminal for improved comfort in cooling mode.
- Convertible from upflow to horizontal left or right.
- Left or right side gas and electric inlet connections.
- All models equipped with flame sensor feature, an integrated board with humidifier and electronic air cleaner hookups.
- Insulated blower compartment, a slow-open gas valve, a specially designed draft inducer motor and blower motor make it one of the quietest furnaces on the market today.
- Pre-paint galvanized steel cabinet.
- Molded permanent filter.
- Easy door removal and replacement.
- Compatible with single or two-stage thermostat. (For optimal performance, two-stage thermostat recommended.)

Physical Data and Specifications—Upflow Models
U.S. and Canadian Models

MODEL NUMBERS RGPE- SERIES		05EBMKR 05NBMKR	07EAMKR 07NAMKR	07EBRQR 07NBRQR	10EBRMR 10NBRMR	12EARMR 12NARMR
100% High Input–BTU/Hr [kW] ②		50,000 [15]	75,000 [22]	75,000 [22]	100,000 [29]	125,000 [37]
High Heating Capacity–BTU/Hr [kW] ①		40,000 [12]	60,000 [18]	60,000 [18]	80,000 [23]	100,000 [29]
70% Low Input–BTU/Hr [kW]		35,000 [10]	52,500 [15]	52,500 [15]	70,000 [20]	87,500 [25]
Low Heating Capacity–BTU/Hr [kW]		28,000 [8]	42,000 [12]	42,000 [12]	56,000 [16]	70,000 [20]
Heating–Ext. Static Pressure [kPa]		.10 [.025]	.15 [.037]	.15 [.037]	.20 [.05]	.20 [.05]
Blower (D x W) [mm]		11 x 7 [279 x 178]	11 x 7 [279 x 178]	11 x 10 [279 x 254]	11 x 10 [279 x 254]	11 x 10 [279 x 254]
ECM Motor H.P. [W]		3/4 [559]	1/2 [373]	3/4 [559]	1 [746]	1 [746]
Motor Full Load Amps.		9.6	7.7	9.6	12.8	12.8
Unit Amps		8.7	8.7	12.0	12.0	12.0
Maximum Overcurrent Protection		15	15	15	15	15
Factory Heating Speed CFM–High Fire [L/s]		850 [401]	1176 [555]	1305 [616]	1600 [753]	1832 [865]
Factory Heating Speed CFM–Low Fire [L/s]		625 [295]	980 [462]	1125 [533]	1300 [615]	1420 [670]
Cooling CFM @ .5" [kPa] E.S.P. (Nominal) [L/s] (Range)		600-1200 [283]-[566]	600-1200 [283]-[566]	1000-1600 [472]-[755]	1200-2000 [566]-[944]	1200-2000 [566]-[944]
Max. E.S.P. (In. W.C.) [kPa]		0.8 [.2]	0.8 [.2]	0.8 [.2]	0.8 [.2]	0.8 [.2]
Temperature Rise Range °F [°C]	High Input	25-55 [13.9-30.6]	30-60 [17-33]	25-55 [13.9-30.6]	30-60 [17-33]	35-65 [19.4-36.1]
	Low Input	20-50 [11.1-27.8]	20-50 [11.1-27.8]	20-50 [11.1-27.8]	25-55 [13.9-30.6]	30-60 [17-33]
Max. Outlet Air Temp. °F [°C]		155 [68.3]	165 [73.8]	165 [73.8]	170 [76.6]	180 [82.2]
Standard Filter Size–Inches [mm]		15 3/4 x 25 [400 x 635]	15 3/4 x 25 [400 x 635]	19 1/4 x 25 [489 x 635]	19 1/4 x 25 [489 x 635]	22 3/4 x 25 [578 x 635]
Approx. Shipping Weight (Lbs.) [kg]		110 [50]	115 [52]	115 [52]	120 [54]	140 [63]
Return Air Cabinets (Opt.) RXGR- Filter Size [mm]		C17B (2) 12 x 16 [305 x 406]	C17B (2) 12 x 16 [305 x 406]	C21B (2) 20 x 16 [508 x 406]	C21B (2) 20 x 16 [508 x 406]	C24B (2) 24 x 16 [610 x 406]
AFUE ①		80%	80%	80%	80%	80%

① In accordance with D.O.E. test procedures.
② See Conversion Kit Index Form for high altitude derate.

[ ] Designates Metric Conversions

Model Number Identification—Upflow Models

R	G	P	E	07E			A	M	K	R
Ruud	Gas Furnace	Upflow/ Horizontal	Design Series E = Communicating	Heating Input Designation			Variations **A** = Std. Cabinet **B** = Wide Cabinet	Blower Designation **M** = 11 x 7 [279 x 178 mm] **R** = 11 x 10 [279 x 254 mm]	Heating & Cooling Designation **K** = 600-1200 CFM [283-566 L/s] **M** = 1200-2000 CFM [566-944 L/s] **Q** = 1000-1600 CFM [566-944 L/s]	Fuel Type **R** = Natural Gas, U.S. and Canadian Standard Furnace
				Electric Ignition	NO_x Model	Input BTU/HR				
				05E	05N	50,000 [15 kW]				
				07E	07N	75,000 [22 kW]				
				10E	10N	100,000 [29 kW]				
				12E	12N	125,000 [37 kW]				

[ ] Designates Metric Conversions

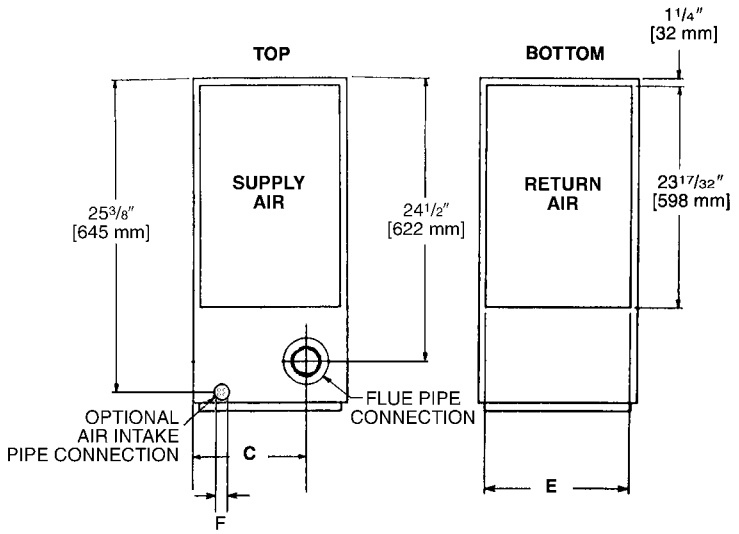

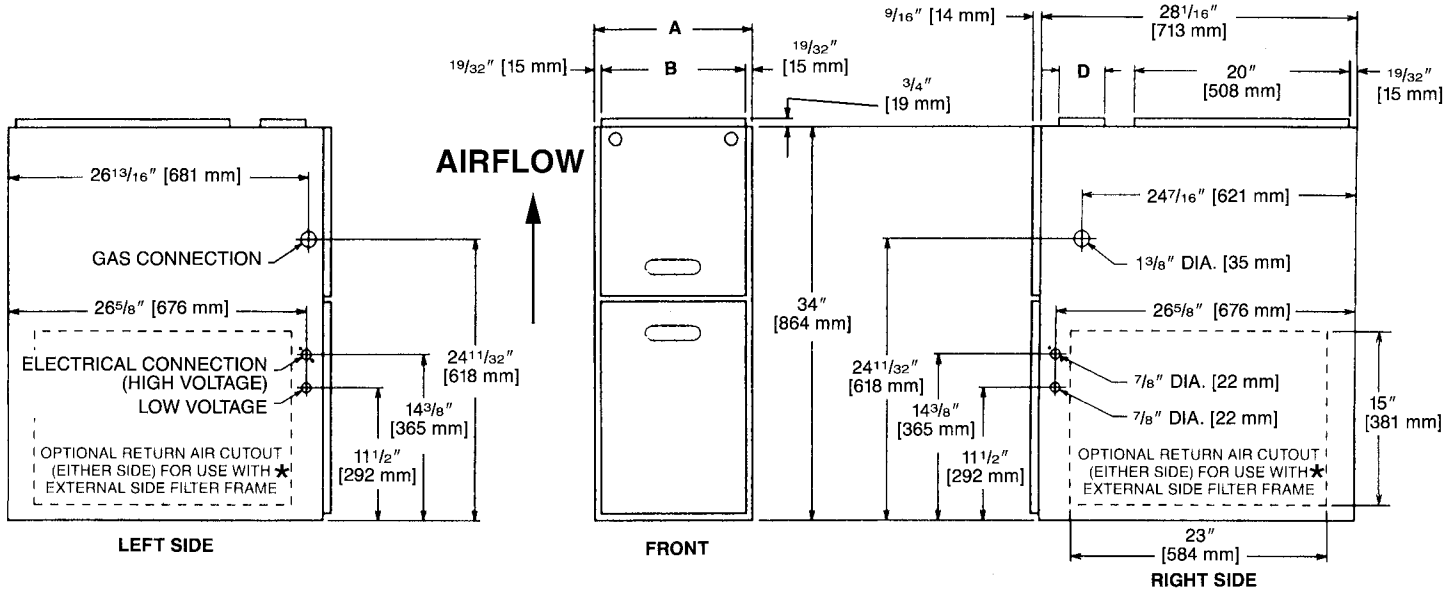

*Both sides for 1800 CFM & above

Upflow Dimensions and Clearance to Combustible Material (inches) [mm]

MODEL RGPE-	A	B	C	D	E	F	REDUCED CLEARANCES (IN.) [mm]						
							LEFT SIDE	RIGHT SIDE	BACK	TOP	FRONT	VENT	SHIP. WGTS. (LBS.) [Kg]
05, 07A	17 1/2 [445]	16 11/32 [415]	12 3/8 [314]	①	15 [381]	2 1/2 [64]	0	3 [76] ②	0	1 [25]	3 [76]	6 [152] ③	105 [47.6]
07B, 10	21 [533]	19 27/32 [504]	14 1/8 [359]	①	18 1/2 [470]	2 1/2 [64]	0	0	0	1 [25]	3 [76]	6 [152] ③	120 [54.4]
12	24 1/2 [622]	23 11/32 [593]	15 7/8 [403]	①	22 [559]	2 1/2 [64]	0	0	0	1 [25]	3 [76]	6 [152] ③	140 [63.5]

NOTES: ① May require a 3" [76 mm] to 4" [102 mm] or 3" [76 mm] to 5" [127 mm] adapter.
② May be 0" [0 mm] with type B vent.
③ May be 1" [25 mm] with type B vent.
Furnaces must be vented in accordance with the National Fuel Gas Code, ANSI Z223.1 and/or Can/CGA-B149 Installation Codes and in accordance with local codes.

[ ] Designates Metric Conversions

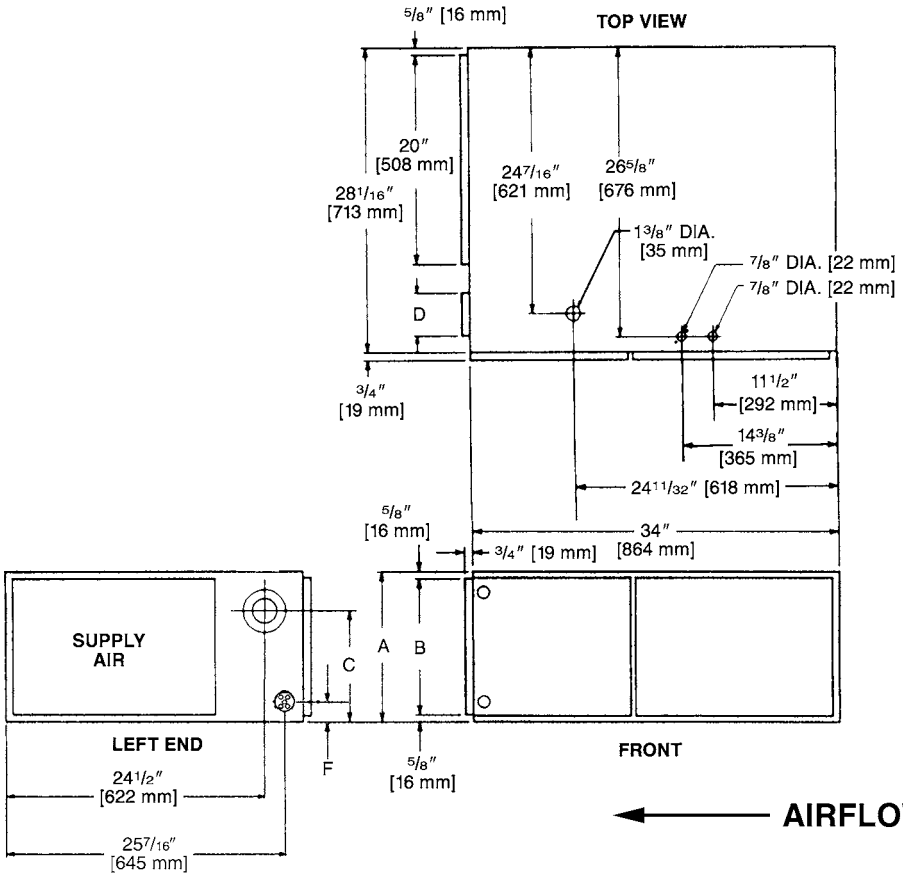

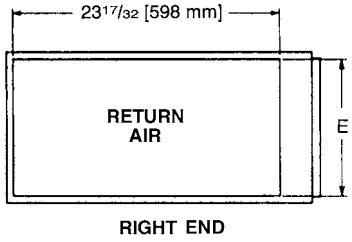

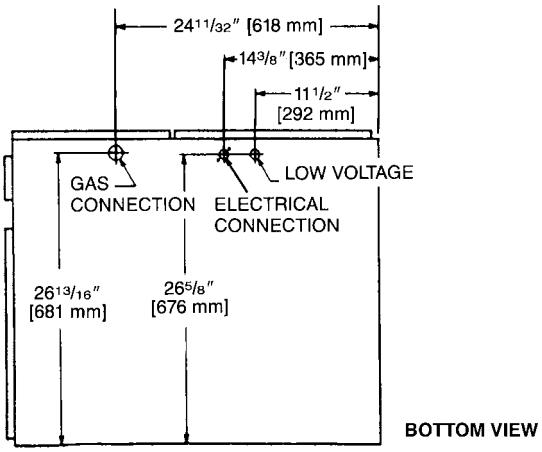

WARNING

THIS FURNACE IS NOT APPROVED OR RECOMMENDED FOR INSTALLATION ON ITS BACK, WITH ACCESS DOORS FACING UPWARDS.

NOTE: In horizontal configuration, return air cutout is not permitted.

Horizontal Dimensions and Clearance to Combustible Material (inches) [mm]

MODEL RGPE-	A	B	C	D	E	F	REDUCED CLEARANCES (IN.) [mm]						
							LEFT SIDE	RIGHT SIDE	BACK	TOP	FRONT	VENT	SHIP. WGTS. (LBS.) [Kg]
05, 07A	17 1/2 [445]	16 11/32 [415]	12 3/8 [314]	①	15 [381]	2 1/2 [64]	0	3 [76] ②	0	1 [25]	3 [76]	6 [152] ③	110 [49.9]
07B, 10	21 [533]	19 27/32 [504]	14 1/8 [359]	①	18 1/2 [470]	2 1/2 [64]	0	0	0	1 [25]	3 [76]	6 [152] ③	120 [54.4]
12	24 1/2 [622]	23 11/32 [593]	15 7/8 [403]	①	22 [559]	2 1/2 [64]	0	0	0	1 [25]	3 [76]	6 [152] ③	140 [63.5]

NOTES: ① May require a 3" [76 mm] to 4" [102 mm] or 3" [76 mm] to 5" [127 mm] adapter.
② May be 0" [0 mm] with type B vent.
③ May be 1" [25 mm] with type B vent.
Furnaces must be vented in accordance with the National Fuel Gas Code, ANSI Z223.1 and/or Can/CGA-B149 Installation Codes and in accordance with local codes.

[ ] Designates Metric Conversions

Blower Performance Data

MODEL RGPE-	BLOWER SIZE (D X W) INCHES [mm]	ECM MOTOR H.P. [W]	BLOWER SPEED	CFM [L/s] AIR DELIVERY EXTERNAL STATIC PRESSURE INCHES WATER COLUMN [kPa]
				.1 [.025]–.8 [.2]
05	11 x 7 [279 x 178]	3/4 [559]	HIGH MED-HI MED LOW	1200 [566] 1000 [472] 800 [378] 600 [283]
07A	11 x 7 [279 x 178]	1/2 [373]	HIGH MED-HI MED LOW	1200 [566] 1000 [472] 800 [378] 600 [283]
07B	11 x 10 [279 x 254]	3/4 [559]	HIGH MED-HI MED LOW	1600 [755] 1400 [661] 1200 [566] 1000 [472]
10, 12	11 x 10 [279 x 254]	1 [746]	HIGH MED-HI MED LOW	2000 [944] 1600 [755] 1400 [661] 1200 [566]

NOTE: See Coil Specification Sheet for coil data.

[ ] Designates Metric Conversions

INTERNAL FILTER RACK FOR BOTTOM OR SIDE RETURN: RXGF-DA*
*Filters available through PROSTOCK®.

SIDE RETURN FILTER RACK: RXGF-CA

BOTTOM RETURN FILTER RACK FOR UPFLOW APPLICATION: RXGF-CB

FILTER RACK FILTER SIZES† INCHES [mm]	
MODEL RGPE-	RXGF-CA (SIDE)
05, 07*AMK	15 3/4 x 25 [400 x 635]
07*BRQ, 10	15 3/4 x 25 [400 x 635]
12	15 3/4 x 25 [400 x 635]

†Filter racks are shipped without filters.
Filters shipped with furnace may be used or a suitable 1" [25.4 mm] filter.
*Designates "E" or "N".

RXPF-F01 and F02

FOSSIL FUEL KIT—is for use with Ruud Heat Pumps and warm air furnaces. RXPF-F02 also meets TVA requirements.

RETURN AIR CABINETS

RETURN AIR CABINETS	A IN. [mm]	FILTER SIZE IN. [mm]
RXGR-C17B	17 1/2 [445]	(2) 12 x 16 [305 x 406]
RXGR-C21B	21 [533]	(2) 20 x 16 [508 x 406]
RXGR-C24B	24 1/2 [622]	(2) 24 x 16 [610 x 406]

ACCESSORY RETURN AIR CABINETS
Return Air Cabinets may be installed on either side application except RXGR-C24B (side application must be on side opposite gas and electrical connections).

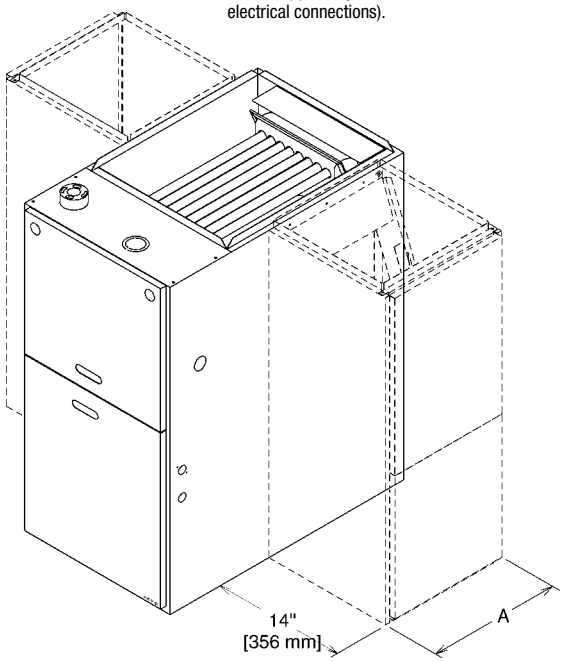

THE RXGR-C24B MUST ONLY BE INSTALLED ON THE SIDE OPPOSITE THE GAS AND ELECTRICAL CONNECTIONS.

WARNING: IMPORTANT NOTICE

A SOLID METAL BASE PLATE (SEE TABLE) MUST BE IN PLACE WHEN THE FURNACE IS INSTALLED WITH SIDE AIR RETURN DUCTS. FAILURE TO INSTALL A BASE PLATE COULD CAUSE PRODUCTS OF COMBUSTION TO BE CIRCULATED INTO THE LIVING SPACE AND CREATE POTENTIALLY HAZARDOUS CONDITIONS.

FURNACE WIDTH IN. [mm]	SOLID BOTTOM KIT NO.	BASE PLATE NO.	BASE PLATE SIZE IN. [mm]
17 1/2 [445]	RXGB-D17	AE-61874-02	15 1/8 x 23 9/16 [384 x 598]
21 [533]	RXGB-D21	AE-61874-03	18 5/8 x 23 9/16 [473 x 598]
24 1/2 [622]	RXGB-D24	AE-61874-04	25 5/8 x 23 9/16 [651 x 598]

RXGW-B01 CHIMNEY ADAPTER

See Installation Instructions for application limitations.

FOR HIGH ALTITUDES:

HIGH ALTITUDE KIT: RXGY-F13 (for all models)

NOTE: High altitude kits do **NOT** include additional burner orifices. If a burner orifice change is necessary, they must be ordered through PROSTOCK®. See Installation instructions for more information.

CAUTION: Always follow National Fuel Gas Code (NFGC) guidelines when converting furnaces for high altitudes.

For all installations above 2000 ft. the burner orifice size needs to be recalculated and verified. A burner orifice change may still be required. See Installation Instructions for more information.

NOTE: For Canadian installations only, an optional derate (manifold gas pressure reduction) method may be used to adjust the furnace for altitude. See Installation Instructions for more information. This optional method may NOT be used for U.S. installations.

(U.S. Models—Kit packaged with furnace. Requires field installation).

[ ] Designates Metric Conversions

THERMOSTATS

RECOMMENDED COMMUNICATING THERMOSTAT
(For Communicating Configurations only)

UHC-TST550CMMS

CONTRACTOR BENEFITS:
- Multi-Purpose Thermostat-Setup, Control & Diagnostics
- Auto-Configuration – No Manual Settings Required in the Field
- System History – More Accurate Diagnostics
- Easy Installation – Requires only 4 wires
- Diagnostic Messages (Service Access to Fault Codes)
- Blower Adjustment in Heat and Cool
- Programmable Fan
- USB Interface for contractor contact information and thermostat programming

HOMEOWNER BENEFITS:
- Scrolling System Status
- De-Humidification Control
- Humidification Control
- Heat/Cool/Auto Change-over
- Outdoor Temperature Display
- Backlight On/Off
- Intelligent Scheduling Ramp-Up/Program Anticipation
- Audio Notifications On/Off
- Air Filter, UV Lights & Humidifier Maintenance Reminder
- Temperature Offset
- Continuous Fan (Hi, Med, Lo)

SUPPLY AIR SENSOR

(For displaying supply air temperature on communicating systems only) (do not install on non-communicating configurations)
Part # 47-24225-01 or equivalent.

GENERAL TERMS OF LIMITED WARRANTY*

Ruud will furnish a replacement for any part of this product which fails in normal use and service within the applicable period stated, in accordance with the terms of the limited warranty.

***For complete details of the Limited and Conditional Warranties, including applicable terms and conditions, contact your local contractor or the Manufacturer for a copy of the product warranty certificate.**

Parts.....Ten (10) Years
Heat Exchanger .....Limited Lifetime

In keeping with its policy of continuous progress and product improvement, Ruud reserves the right to make changes without notice.

Ruud Heating, Cooling & Water Heating • P.O. Box 17010
Fort Smith, Arkansas 72917 • www.ruud.com

Ruud Canada • 125 Edgeware Road, Unit 1
Brampton, Ontario • L6Y 0P5

Rely on Ruud.™

PRINTED IN U.S.A 10/13 QG FORM NO. G22-512 REV. 1