SUBMITTAL COVER SHEET

PROJECT NAME _____

LOCATION _____

ARCHITECT _____

ENGINEER _____

CONTRACTOR _____

SUBMITTED BY _____ DATE _____

UNIT SUMMARY

Quantity						
Unit Designation						
Model No.						
Total Cooling						
Sensible Cooling						
Air Ent. Evaporator						
Air Lvg. Evaporator						
Heating Input						
Heating Output						
CFM/ESP						
EER/SEER						
Electrical						
Minimum Ampacity						
Min.-Max. Breaker						
Net Unit Weight						
Accessory						
Catalog Form Number						

ACCESSORIES:

NOTES:

SUBMITTAL SHEET FOR RHGM- SERIES 7.5 & 10 NOMINAL TON [26 & 35 kW] AIR HANDLER

featuring R-410A

JOB NAME _____ MODEL NO. _____

CONTRACTOR _____ OUTDOOR UNIT MODEL NO. _____

ENGINEER _____ LOCATION _____

SUBMITTED FOR ☐ APPROVAL ☐ RECORD ORDER NO. _____

DATE _____

UNIT DATA

COOLING PERFORMANCE

TOTAL CAPACITY*..... _____ MBH [kW]

SENSIBLE CAPACITY*..... _____ MBH [kW]

OUTDOOR DESIGN TEMP. .... _____ °F [°C] DB

TOTAL SUPPLY AIR..... _____ CFM

TEMP. OF AIR ENTERING EVAPORATOR COIL..... _____ °F DB

_____ °F WB

POWER INPUT REQUIREMENT..... _____ kW

(*uses blower motor heat)

HEATING PERFORMANCE

TOTAL CAPACITY*..... _____ MBH [kW]

OUTDOOR DESIGN TEMP. .... _____ °F [°C] DB

TEMP. OF AIR ENTERING EVAPORATOR COIL..... _____ °F [°C] DB

POWER INPUT REQUIREMENT..... _____ kW

(*uses blower motor heat)

SUPPLY AIR BLOWER PERFORMANCE

TOTAL AIR SUPPLY ..... _____ CFM [L/s]

TOTAL RESISTANCE EXTERNAL TO UNIT..... _____ IWG

BLOWER SPEED ..... _____ RPM

POWER OUTPUT REQUIREMENT .. _____ BHP

MOTOR RATING ..... _____ HP [W]

POWER INPUT REQUIREMENT..... _____ kW

ELECTRICAL DATA

POWER SUPPLY..... _____ Hz

TOTAL UNIT AMPACITY..... _____ AMPS

MAXIMUM OVERCURRENT DEVICE FUSES/HACR BREAKER ..... _____ AMPS

CLEARANCES

SERVICE ACCESS SIDES	36" [914 mm]
OTHER SIDES	24" [610 mm]
ABOVE UNIT	00"

FEATURES FOR RHGM- AIR HANDLERS 7.5 & 10 NOMINAL TON [26 & 35 kW]

- The RHGM-090 & 120 Air Handler is designed for heat pump applications. It has two TX valves with internal check valves that allow reverse flow to occur, providing superior control during heating and cooling cycles. RHGM-090 & 120 Air Handler has been rated and certified to operate with 7.5 ton [26 kW] and 10 ton [35 kW] remote heat pumps RPWL.
- Low profile
- Install horizontally or vertically as shipped from the factory
- Powder coat painted cabinet
- Optional high static drive packages deliver nominal CFM up to 2" E.S.P.
- Standard filter rack with 1" throwaway filters (rack will accept field supplied 2" filter)
- Standard thermal expansion valves
- Two circuit, interlaced copper tube/aluminum fin coils to provide maximum heat transfer capabilities
- Flexible field connections: refrigerant piping, condensate piping, power and control wiring from either side of unit
- Easy service access from top or either side
- RHGM-090 air handler is AHRI rated and certified for RPWL-090. RHGM-120 air handler is AHRI rated and certified for RPWL-120 air handler.
- Factory run tested prior to shipment
- Factory one (1) year limited warranty on parts

FIELD INSTALLED ACCESSORIES

Hot Water Coil ..... ☐
Steam Coil ..... ☐
Filter Frame Kit ..... ☐
Inlet Grille Kit ..... ☐
Discharge Grille Kit ..... ☐
Discharge Plenum Kit ..... ☐
Mixing Box ..... ☐
Auxiliary Heater Kit ..... ☐

c UL us LISTED

AHRI CERTIFIED™ www.ahridirectory.org
Unitary Large HP
AHRI Standard 340/360
Certification applies only when the complete system is listed with AHRI.

Accredited by the RvA
ABS Quality Evaluations, Inc. Management System Certification
ANAB ACCREDITED
ISO 9001:2000
Certificate Number: 30164

UNIT DIMENSIONS

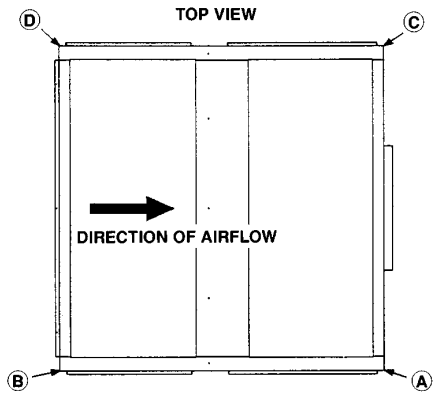

RETURN AIR OPENINGS = 47 3/8″ [1203] WIDTH x 19 7/8″ [505] HEIGHT

7.5 AND 10 NOMINAL TONS [26 AND 35 kW]

MODEL	REFRIGERANT STUB SIZES, IN. [mm]			
	DUAL LIQ.	DUAL SUC.	SINGLE LIQ.	SINGLE SUC.
090	1/2, 1/2 [13, 13]	7/8, 7/8 [22, 22]	5/8 [16]	1 3/8 [35]
120	1/2, 1/2 [13, 13]	7/8, 7/8 [22, 22]	5/8 [16]	1 3/8 [35]

MODEL	CORNER WEIGHTS, LBS. [kg]				TOTAL WEIGHT
	A	B	C	D	
090	98 [44]	86 [40]	97 [44]	84 [38]	365 [166]
120	100 [45]	88 [40]	97 [44]	87 [40]	372 [169]

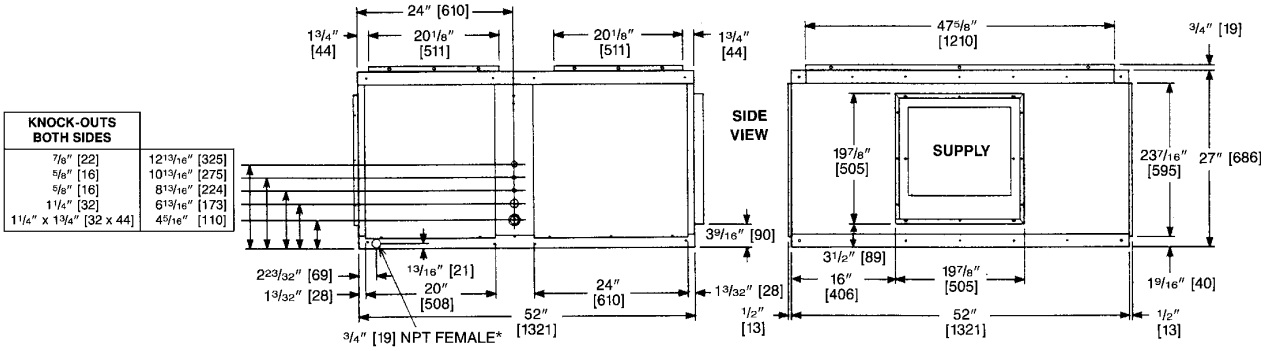

*Drain connections are provided on both sides of the drain pan. The drain can be connected to either side of the drain pan, but not both. The drain must be trapped.

[ ] Designates Metric Conversions

Before proceeding with installation, refer to installation instructions packaged with each model, as well as complying with all Federal, State, Provincial, and Local codes, regulations, and practices.

Rheem Sales Company, Inc.
P.O. Box 17010, Fort Smith, AR 72917

"In keeping with its policy of continuous progress and product improvement, Rheem reserves the right to make changes without notice."

PRINTED IN U.S.A. 8-09 DC FORM NO. X33-1287