Ruud Air Handler

RHLP- Standard Efficiency

X-13 (ECM) Motor

- RHLP features an X-13 (ECM) motor which provides enhanced SEER performance with most Ruud outdoor units.
- 1 1/2 ton [5.3 kW] through 5 ton [17.6 kW] models are between 42 1/2 to 55 1/2 inches [1080 to 1410 mm] tall and 22 inches [559 mm] deep.
- Versatile 4-way convertible design for upflow, downflow, horizontal left and horizontal right applications.
- Factory-installed high efficiency indoor coil.
- All models meet or exceed 330 to 400 CFM [156 to 189 L/s] per ton at .3 inches [.7 kPa] of external static pressure.
- Enhanced airflow up to .7" external static pressure.
- Sturdy construction with 1.0 inch [.24 kPa] of reinforced foil faced jacket insulation for excellent thermal and sound insulation.
- Field-installed auxiliary electric heater kits provide exact heat for indoor comfort. Kits include circuit breakers which meet UL and cUL requirements for service disconnect.
- Suitable for R-410A or R-22 Refrigerants with piston change.

TABLE OF CONTENTS

Engineering Features

RHLP- Series

- The most compact unit design available, all standard heat air handler models only 42½ to 55½ inches [1079 to 1409 mm] high.
- Attractive pre-painted cabinet exterior.
- Rugged wall steel cabinet construction, designed for added strength and versatility.
- 1.0" foil faced insulation mechanically retained in blower compartment for excellent thermal and sound performance.
- Four leg blower motor mount.
- Blower housing with controls, motor and blower. Slide out design for service and maintenance convenience.
- Traditional open wire element design for heat applications.
- Field convertible for vertical downflow, horizontal left hand or right hand air supply.
- 3 combustible floor base accessories fit all model sizes when required for downflow installations on combustible floors.
- Indoor coil design provides low air side pressure drop, high performance and extremely compact size.
- Piston on indoor coil provides for operation with air conditioning or heat pump using the same coil.
- Coils are constructed of aluminum fins bonded to internally grooved copper tubing.
- Molded polymer corrosion resistant condensate drain pan is provided on all indoor coils.
- Supply duct flanges provided as standard on air handler cabinet.
- Provisions for field electrical, connections available from either side or top of the air handler cabinet.
- Connection point for high voltage wiring is inside the air handler cabinet. Low voltage connection is made on the outside of the air handler cabinet.
- Concentric knockouts are provided for power connection to cabinet. Installer may pull desired hole size up to 2 inches [51 mm] for 1½ inch [38 mm] conduit.
- Front refrigerant and drain connections.
- Suitable for R-410A or R-22 refrigerants with piston change.

[ ] Designates Metric Conversions

Model Number Identification

R H L P — HM 24 17 J A

Design Variation
A = 1st Design

Voltage
A = 115/1/60
J = 208/240/1/60

Cabinet Size
17 = 17.5" [431.8 mm] (600-1200 CFM)
21 = 21" [533.4 mm] (1400-1600 CFM)
24 = 24.5" [609.6 mm] (1600-1800 CFM)

Capacity
24 = 18,000/24,000 BTU/H [5.27/7.03 kW]
36 = 30,000/36,000 BTU/H [8.79/10.55 kW]
48 = 42,000/48,000 BTU/H [12.31/14.06 kW]

HM = A/C or HP Multi-Position
(Vertical Upflow/Horizontal Left is the factory configuration)

Refrigerant /Metering Device
P = R-410A/R-22/Fixed Orifice

L = Standard Efficiency (X-13 (ECM) Motor)

Classification
H = Air Handler

Ruud

[ ] Designates Metric Conversions

Available Models at 115V A Voltage
RHLP-HM2417AA
RHLP-HM3617AA
RHLP-HM4821AA
RHLP-HM4824AA

Available Models at 208/240V J Voltage
RHLP-HM2417JA
RHLP-HM3617JA
RHLP-HM4821JA
RHLP-HM4824JA

- **Supply circuit protective devices may be fuses or "HACR" type circuit breakers.**
- **Largest motor load is included in single circuit and multiple circuit.**
- **If non-standard fuse size is specified, use the next larger fuse size.**
- **J Voltage (230V) single-phase air handler is designed to be used with single or three phase 230 volt power. In the case of connecting 3-phase power to the air handler terminal block, bring only two leads to the terminal block. Cap, insulate and fully secure the third lead.**
- **The air handlers are shipped from the factory with the proper indoor coil installed, and cannot be ordered without a coil.**
- **The air handlers do not have an internal filter rack. An external filter rack or other means of filtration is required.**

Unit Dimensions

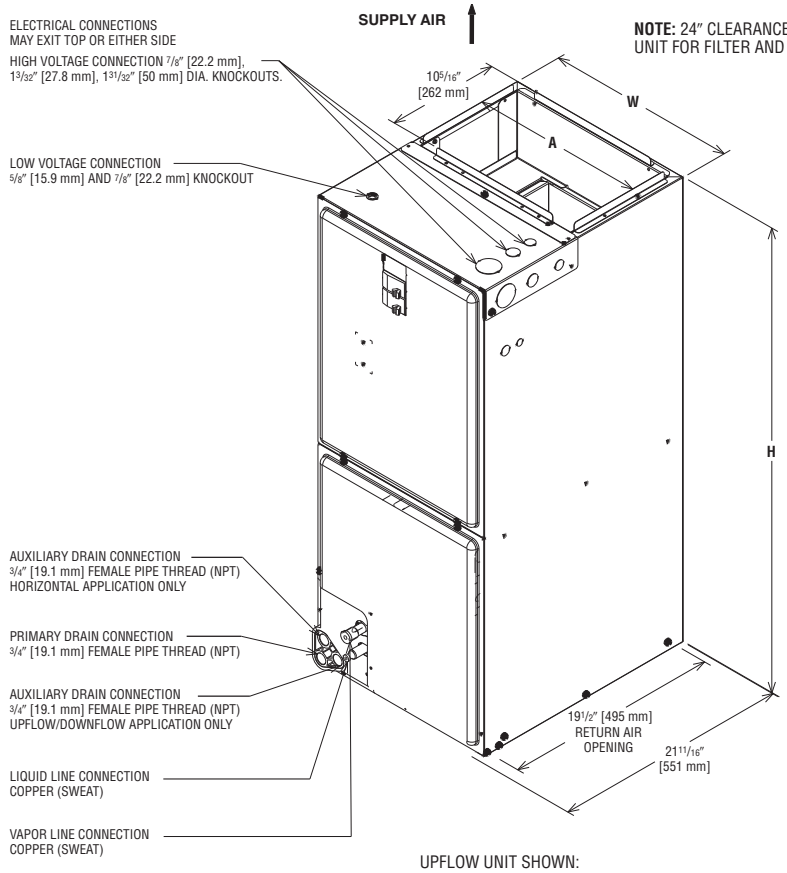

Return Air Opening Dimensions

Model Cabinet Size	Return Air Opening Width (Inches)	Return Air Opening Depth/Length (Inches)
17	15 7/8	19 3/4
21	19 3/8	19 3/4
24	22 7/8	19 3/4

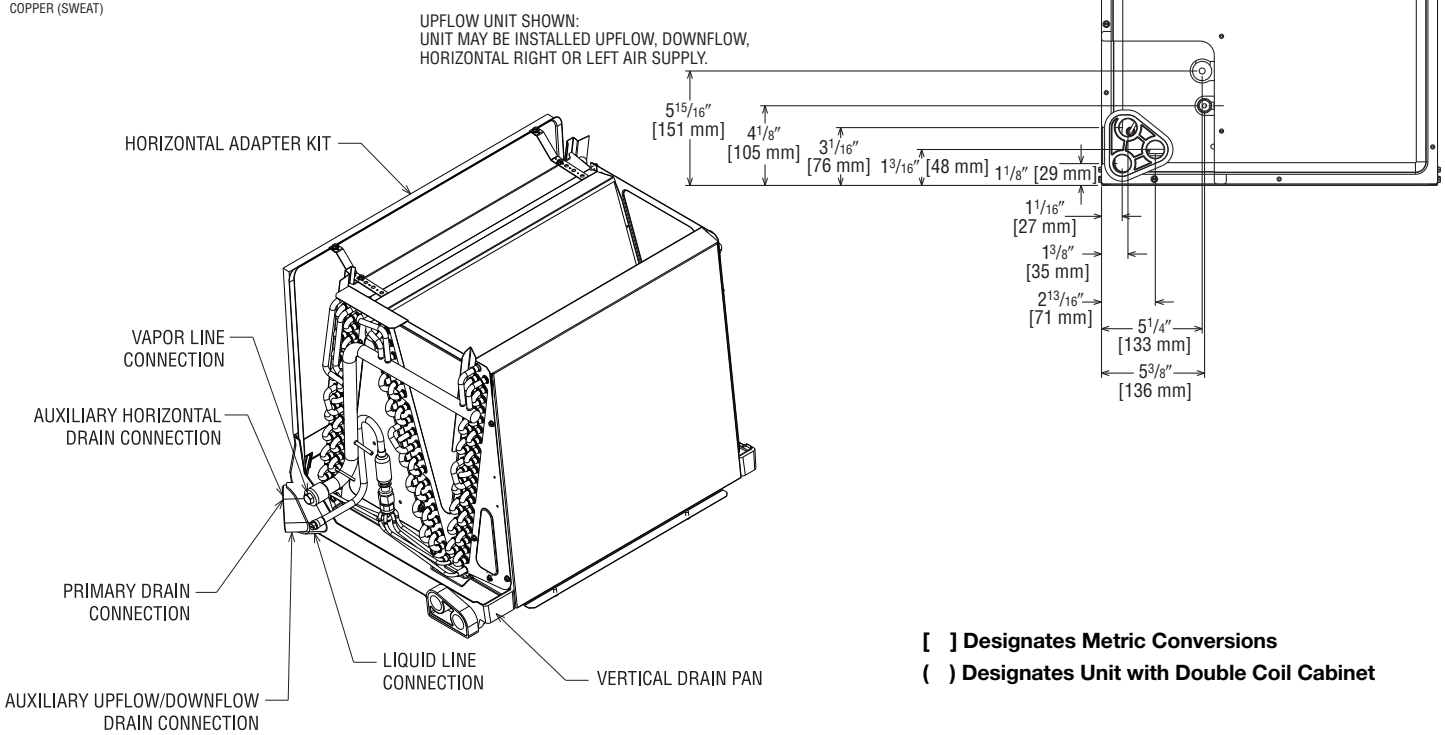

[ ] Designates Metric Conversions

( ) Designates Unit with Double Coil Cabinet

Unit Dimensions & Weights

Model Size RHLP	Unit Width "W" In. [mm]	Unit Height "H" In. [mm]	Supply Duct "A" In. [mm]	Air Flow CFM (Nom.) [L/s]		Unit Weight/Shipping Weight (Lbs.) [kg]
				Lo	Hi	Unit With Coil (Max. KW)
2417	17 1/2 [445]	42 1/2 [1080]	16 [406]	600 [283]	800 [378]	82/96 [37/44]
3617	17 1/2 [445]	42 1/2 [1080]	16 [406]	1000 [472]	1200 [566]	92/106 [37/48]
4821	21 [533]	50 1/2 [1282]	19 1/2 [495]	1400 [661]	1600 [755]	150/166 [68/75]
4824	24 1/2 [622]	55 1/2 [1410]	23 [584]	1600 [755]	—	162/180 [73/81]

Airflow Directional Data

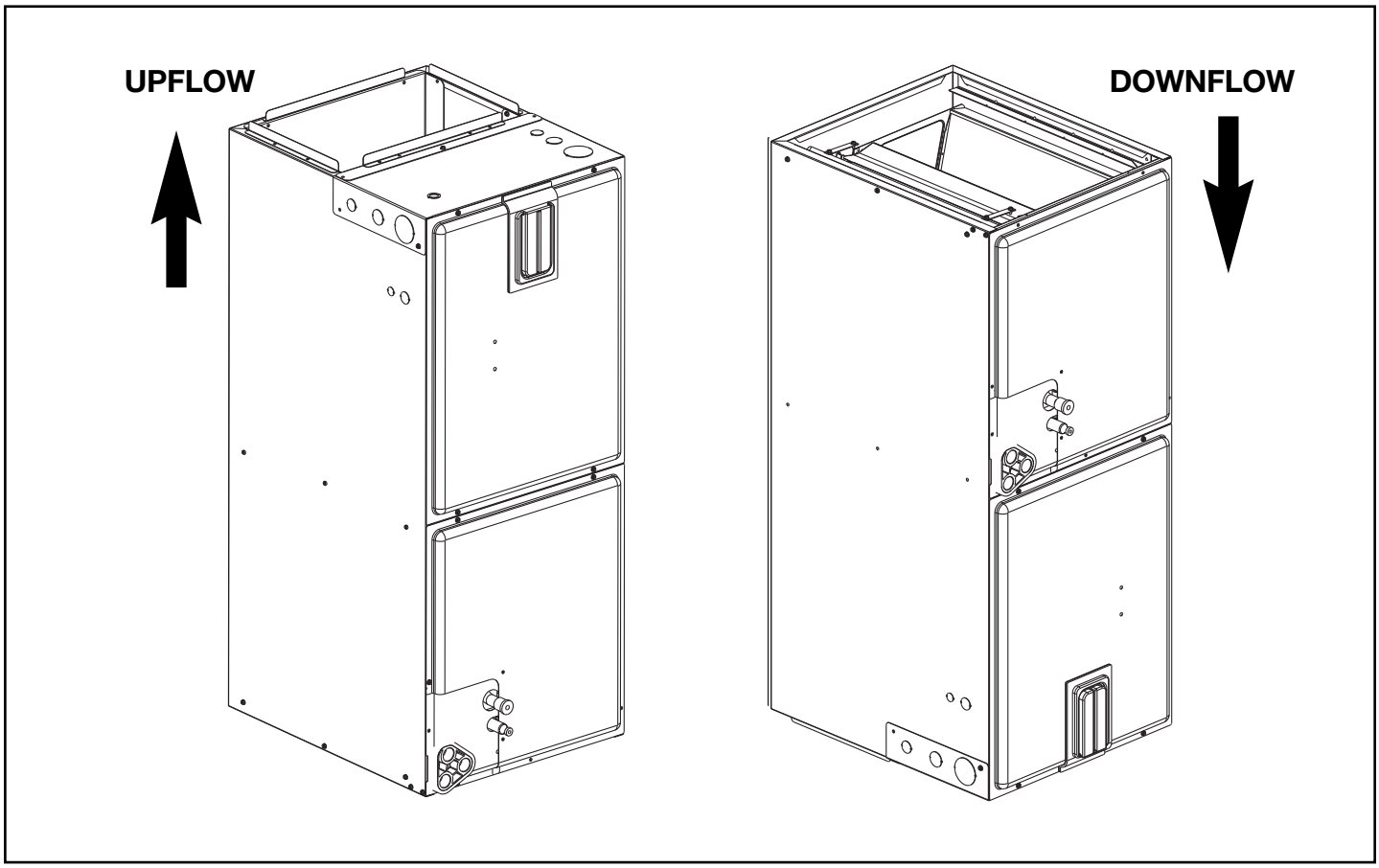

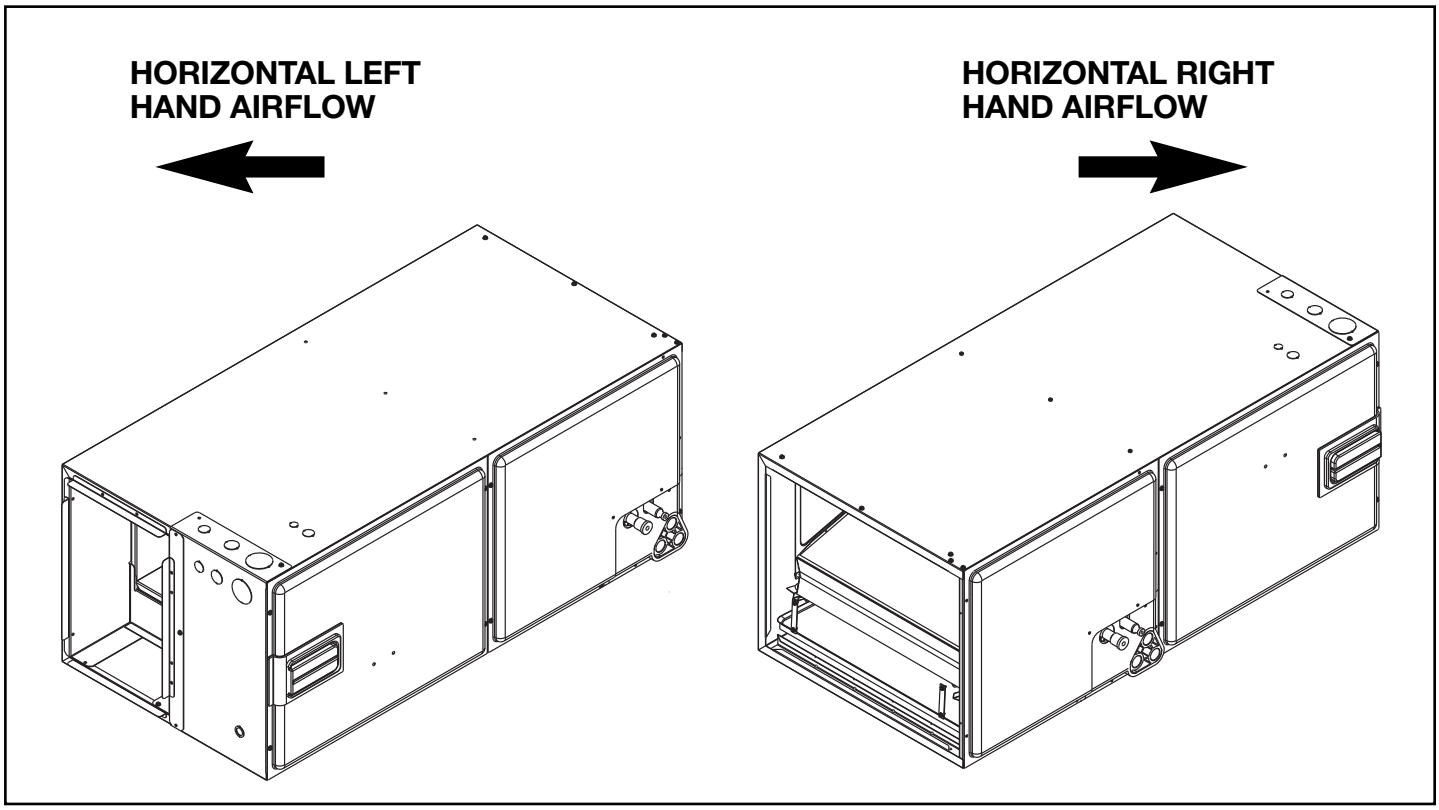

Airflow Performance

Airflow performance data is based on cooling performance with a coil and no filter in place. Select performance table for appropriate unit size, voltage and number of electric heaters to be used. Make sure external static applied to unit allows operation within the minimum and maximum limits shown in table below for both cooling and electric heat operation. For optimum blower performance, operate the unit in the .3 [8 mm] to .7 inches [18 mm] W.C. external static range. Units with coils should be applied with a minimum of .1 inch [3 mm] W.C. external static range.

Airflow Operating Limits

Model Cabinet Size	17		17		21		24
Cooling BTUH x 1,000 Cooling Tons Nominal	-018 1.5	-024 2	-030 2.5	-036 3	-042 3.5	-048 4	-048 4
Heat Pump or Air Conditioning Maximum Heat/Cool CFM [L/s] (37.5 CFM [18 L/s]/1,000 BTUH) (450 CFM [212 L/s]/Ton Nominal)	675 [319]	900 [425]	1125 [531]	1350 [637]	1575 [743]	1800 [850]	1800 [850]
Heat Pump or Air Conditioning Nominal Heat/Cool CFM [L/s] (33.3 CFM [16 L/s]/1,000 BTUH) (400 CFM [189 L/s]/Ton Nominal)	600 [283]	800 [378]	1000 [472]	1200 [566]	1400 [661]	1600 [755]	1600 [755]
Heat Pump or Air Conditioning Minimum Heat/Cool CFM [L/s] (30.0 CFM [14 L/s]/1,200 BTUH) (360 CFM [170 L/s]/Ton Nominal)	540 [255]	720 [340]	900 [425]	1080 [510]	1260 [595]	1440 [680]	1440 [680]
Maximum kW Electric Heating & Minimum Electric Heat CFM [L/s]	13 487 [230]	13 617 [291]	18 814 [384]	18 1054 [497]	20 1171 [553]	25 1502 [709]	25 1502 [709]
Maximum Electric Heat Rise °F [°C]	80 [26.7]	63 [17.2]	66 [18.9]	51 [10.6]	49 [9.4]	50 [10]	50 [10]

[ ] Designates Metric Conversions

115V/208V/240V/460V Airflow Performance Data—RHLP (X-13 (ECM) Motor)

Model No. RHLP	Tonnage Application	Motor Speed From Factory	Manufacturer Recommended Air-Flow Range (Min/Max) CFM	Blower Size/ Motor HP [W] # of Speed	Motor Speed		X-13 CFM [L/s] Air Delivery/RPM/Watts—115/208/240 Volts						
							External Static Pressure—Inches W.C. [kPa]						
							0.1 [.02]	0.2 [.05]	0.3 [.07]	0.4 [.10]	0.5 [.12]	0.6 [.15]	0.7 [.17]
-2417 No Heater	1.5 Ton	5	509/681 CFM [240/321 L/s]	10x6 1/3 HP [249] 5 Speed	2	CFM	689 [325]	644 [304]	602 [284]	563 [266]	509 [240]	—	—
						RPM	580	633	683	728	781	—	—
						Watts	66	84	86	88	91	—	—
					3	CFM	—	—	—	—	681 [321]	644 [304]	603 [285]
						RPM	—	—	—	—	835	879	916
						Watts	—	—	—	—	136	143	152
-2417 with 13 kW Heater	1.5 Ton	5	490/666 CFM [231/314 L/s]	10x6 1/3 HP [249] 5 Speed	2	CFM	670 [316]	625 [295]	583 [275]	544 [257]	490 [231]	—	—
						RPM	608	661	711	756	809	—	—
						Watts	75	93	95	47	100	—	—
					3	CFM	—	—	—	—	666 [314]	629 [297]	588 [277]
						RPM	—	—	—	—	855	899	936
						Watts	—	—	—	—	144	151	160
-2417 No Heater	2 Ton	5	730/651 CFM [345/307 L/s]	10x6 1/3 HP [249] 5 Speed	4	CFM	875 [413]	839 [396]	804 [379]	762 [360]	730 [345]	—	—
						RPM	679	724	765	810	852	—	—
						Watts	121	131	135	142	143	—	—
					5	CFM	—	—	—	—	862 [407]	828 [391]	801 [378]
						RPM	—	—	—	—	904	940	970
						Watts	—	—	—	—	203	215	228
-2417 with 13 kW Heater	2 Ton	5	711/626CFM [336/295 L/s]	10x6 1/3 HP [249] 5 Speed	4	CFM	856 [404]	820 [387]	785 [370]	743 [351]	711 [336]	—	—
						RPM	707	752	793	838	880	—	—
						Watts	130	140	144	151	152	—	—
					5	CFM	—	—	—	—	837 [395]	803 [379]	776 [366]
						RPM	—	—	—	—	924	960	990
						Watts	—	—	—	—	211	223	288
-3617 No Heater	2.5 Ton	5	935/1084 CFM [441/512 L/s]	10x8 1/2 HP [373] 5 Speed	2	CFM	1093 [516]	1050 [496]	1017 [480]	977 [461]	935 [441]	—	—
						RPM	671	725	764	809	852	—	—
						Watts	153	168	174	180	188	—	—
					3	CFM	—	—	—	—	1084 [512]	1040 [491]	1001 [472]
						RPM	—	—	—	—	896	936	971
						Watts	—	—	—	—	249	257	261
-3617 with 18 kW Heater	2.5 Ton	5	910/1059 CFM [429/500 L/s]	10x8 1/2 HP [373] 5 Speed	2	CFM	1068 [504]	1025 [484]	992 [468]	952 [449]	910 [429]	—	—
						RPM	711	765	804	849	892	—	—
						Watts	164	179	185	191	199	—	—
					3	CFM	—	—	—	—	1059 [500]	1015 [479]	976 [461]
						RPM	—	—	—	—	936	976	1011
						Watts	—	—	—	—	260	268	272
-3617 No Heater	3 Ton	5	1130/1275 CFM [533/602 L/s]	10x8 1/2 HP [373] 5 Speed	4	CFM	1270 [599]	1237 [584]	1199 [566]	1165 [550]	1130 [533]	—	—
						RPM	775	816	846	882	926	—	—
						Watts	237	249	259	268	277	—	—
					5	CFM	—	—	—	—	1275 [602]	1244 [587]	1211 [571]
						RPM	—	—	—	—	963	999	1029
						Watts	—	—	—	—	338	348	363
-3617 with 18 kW Heater	3 Ton	5	1105/1250 CFM [521/590 L/s]	10x8 1/2 HP [373] 5 Speed	4	CFM	1245 [588]	1212 [572]	1174 [554]	1140 [538]	1105 [521]	—	—
						RPM	815	856	886	922	966	—	—
						Watts	248	260	270	279	288	—	—
					5	CFM	—	—	—	—	1250 [590]	1219 [575]	1186 [560]
						RPM	—	—	—	—	1003	1039	1069
						Watts	—	—	—	—	349	359	374

[ ] Designates Metric Conversions

115V/208V/240V/460V Airflow Performance Data—RHLP (X-13 (ECM) Motor) (con't.)

Model No. RHLP	Tonnage Application	Motor Speed From Factory	Manufacturer Recommended Air-Flow Range (Min/Max) CFM	Blower Size/ Motor HP [W] # of Speed	Motor Speed		PSC CFM [L/s] Air Delivery/RPM/Watts—115/208/240 Volts						
							External Static Pressure—Inches W.C. [kPa]						
							0.1 [.02]	0.2 [.05]	0.3 [.07]	0.4 [.10]	0.5 [.12]	0.6 [.15]	0.7 [.17]
-4821 No Heater	3.5 Ton	5	1337/1447 CFM [631/683 L/s]	10x10 3/4 HP [559] 5 Speed	2	CFM	1473 [695]	1442 [681]	1401 [661]	1373 [648]	1337 [631]	—	—
						RPM	781	825	867	905	949	—	—
						Watts	257	271	303	307	315	—	—
					3	CFM	—	—	—	—	1447 [683]	1433 [676]	1402 [662]
						RPM	—	—	—	—	987	1034	1065
						Watts	—	—	—	—	394	406	405
-4821 with 20 kW Heater	3.5 Ton	5	1297/1333 CFM [612/629 L/s]	10x10 3/4 HP [559] 5 Speed	2	CFM	1433 [676]	1402 [662]	1361 [642]	1333 [629]	1297 [612]	—	—
						RPM	831	875	919	954	989	—	—
						Watts	277	295	313	319	325	—	—
					3	CFM	—	—	—	—	1333 [629]	1300 [613]	1267 [598]
						RPM	—	—	—	—	1011	1046	1080
						Watts	—	—	—	—	350	364	377
-4821 No Heater	4 Ton	5	1535/1654 CFM [724/781 L/s]	10x10 3/4 HP [559] 5 Speed	4	CFM	1665 [786]	1631 [770]	1601 [756]	1572 [742]	1535 [724]	—	—
						RPM	853	893	934	968	1015	—	—
						Watts	351	387	401	406	422	—	—
					5	CFM	—	—	—	—	1654 [781]	1624 [766]	1563 [738]
						RPM	—	—	—	—	1036	1078	1095
						Watts	—	—	—	—	500	513	523
-4821 with 25 kW Heater	4 Ton	5	1495/1614 CFM [706/762 L/s]	10x10 3/4 HP [559] 2 Speed	4	CFM	1625 [767]	1591 [751]	1561 [737]	1532 [723]	1495 [706]	—	—
						RPM	894	932	970	1020	1052	—	—
						Watts	389	400	410	430	450	—	—
					5	CFM	—	—	—	—	1614 [762]	1584 [748]	1523 [719]
						RPM	—	—	—	—	1085	1090	1105
						Watts	—	—	—	—	514	520	530
-4824 No Heater	4 Ton	3	1545/1732 CFM [729/817 L/s]	11x11 3/4 HP [559] 5 Speed	2	CFM	1748 [825]	1669 [788]	1639 [773]	1599 [755]	1545 [729]	—	—
						RPM	660	698	734	762	795	—	—
						Watts	297	311	326	340	353	—	—
					3	CFM	—	—	—	—	1732 [817]	1683 [794]	1630 [769]
						RPM	—	—	—	—	840	872	899
						Watts	—	—	—	—	448	467	480
-4824 with 25 kW Heater	4 Ton	3	1505/1692 CFM [710/798 L/s]	11x11 3/4 HP [559] 5 Speed	2	CFM	1708 [806]	1629 [769]	1599 [755]	1559 [736]	1505 [710]	—	—
						RPM	680	736	760	790	820	—	—
						Watts	305	330	341	350	361	—	—
					3	CFM	—	—	—	—	1692 [798]	1643 [775]	1590 [750]
						RPM	—	—	—	—	865	890	1014
						Watts	—	—	—	—	460	470	481

Notes: X-13 (ECM) motor speed changes.
All X-13 (ECM) motors have 5 speed tabs. Speed tab 1 is for continuous fan. Speed tab 2 (low static) and Speed tab 3 (high static) are for lower tonnage. Speed tab 4 (low static) and Speed tab 5 (high static) are for higher tonnage.
X-13 (ECM) air handlers are always shipped from factory at Speed tab 5, except for -4824, which is set at Speed tab 3. For instance, RHLP-HM2417JA is always shipped at high static 2-ton airflow (Speed tab 5). To change to 1.5-ton airflow, move the blue wire to Speed tab 2 or 3 on the X-13 (ECM) motor.
The low static Speed tab 2 (lower tonnage) and 4 (higher tonnage) are used for external static below 0.5" WC. The high static Speed tab 3 (lower tonnage) and 5 (higher tonnage) are used for external static exceeding 0.5" WC. Move the blue wire to the appropriate Speed tab as required by the application needs.

- The airflow for continuous fan (Speed tab 1) is always set at 50% of the Speed tab 4.
- The above airflow table lists the airflow information for air handlers without heater and air handler with maximum heater allowed for each model.
- The following formula can be used to calculate the approximate airflow, if a smaller (N kW) than the maximum heater kit is installed.
  Approximate Airflow = Airflow without heater – (Airflow without heater – Airflow with maximum heater) x (N kW/maximum heater kW)

[ ] Designates Metric Conversions

Electrical Data – Blower Motor Only – No Electric Heat

Model RHLP	Voltage	Application Phase*	Hertz	HP [W]	RPM	Speeds	Circuit Amps.	Minimum Circuit Ampacity	Maximum Circuit Protector
2417	208/240	1 & 3	60	1/3 [249]	300-1100	4	1.6	2.0	15
3617				1/2 [373]	300-1100	4	2.7	4.0	15
4821/4824				3/4 [559]	300-1100	4	3.8	5.0	15
2417	115	1	60	1/3 [249]	300-1100	4	4.8	6.0	15
3617				1/2 [373]	300-1100	4	6.8	9.0	15
4821/4824				3/4 [559]	300-1100	4	8.4	11.0	15

* Blower motors are all single phase motors.

[ ] Designates Metric Conversions

Electrical Data – With Electric Heat

Installation of the U.L. Listed original equipment manufacturer provided heater kits listed in the following table is recommended for all auxiliary heating requirements.

Model	Heater Model No.	Heater KW 208/240V	PH/HZ	No. Elements - KW Per	Type Supply Circuit Single Circuit Multiple Circuit	Circuit Amps.	Motor Ampacity	Minimum Circuit Ampacity	Maximum Circuit Protection
RHLP 2417	RXBH-1724B03J/RXBH-17A03J	2.25/3.0	1/60	1 - 3.0	SINGLE	10.8/12.5	1.6	16/18	20/20
	RXBH-1724B05J/RXBH-17A05J	3.6/4.8	1/60	1 - 4.8	SINGLE	17.3/20.0	1.6	24/27	25/30
	RXBH-1724B07J/RXBH-17A07J	5.4/7.2	1/60	2 - 3.6	SINGLE	26.0/30.0	1.6	35/40	35/40
	RXBH-1724B10J/RXBH-17A10J	7.2/9.6	1/60	2 - 4.8	SINGLE	34.6/40.0	1.6	46/52	50/60
	RXBH-1724A13J	9.4/12.5	1/60	3-4.17	SINGLE	45.1/52.1	1.6	59/68	60/70
	RXBH-1724A13J	3.1/4.2	1/60	1-4.17	MULTIPLE CKT 1	15.0/17.4	1.6	21/24	25/25
		6.3/8.3	1/60	2-4.17	MULTIPLE CKT 2	30.1/34.7	0	38/44	40/45
	RXBH-1724A07C	5.4/7.2	3/60	3 - 2.4	SINGLE	15.0/17.3	1.6	21/24	25/25
	RXBH-1724A10C	7.2/9.6	3/60	3 - 3.2	SINGLE	20.0/23.1	1.6	27/31	30/35
	RXBH-1724A13C	9.4/12.5	3/60	3 - 4.17	SINGLE	26.1/30.1	1.6	35/40	35/40
RHLP 3617	RXBH-1724A03J	2.25/3.0	1/60	1 - 3.0	SINGLE	10.8/12.5	2.7	17/19	20/20
	RXBH-1724A05J	3.6/4.8	1/60	1 - 4.8	SINGLE	17.3/20.0	2.7	25/29	25/30
	RXBH-1724A07J	5.4/7.2	1/60	2 - 3.6	SINGLE	26.0/30.0	2.7	36/41	40/45
	RXBH-1724A10J	7.2/9.6	1/60	2 - 4.8	SINGLE	34.6/40.0	2.7	47/54	50/60
	RXBH-1724A13J	9.4/12.5	1/60	3-4.17	SINGLE	45.1/52.1	2.7	60/69	60/70
	RXBH-1724A13J	3.1/4.2	1/60	1-4.17	MULTIPLE CKT 1	15.0/17.4	2.7	23/26	25/30
		6.3/8.3	1/60	2-4.17	MULTIPLE CKT 2	30.1/34.7	0	38/44	40/45
	RXBH-1724A15J	10.8/14.4	1/60	3-4.8	SINGLE	51.9/60.0	2.7	69/79	70/80
	RXBH-1724A15J	3.6/4.8	1/60	1 - 4.8	MULTIPLE CKT 1	17.3/20.0	2.7	25/29	25/30
		7.2/9.6	1/60	2 - 4.8	MULTIPLE CKT 2	34.6/40.0	0	44/50	45/50
	RXBH-1724A18J	12.8/17.0	1/60	3-5.68	SINGLE	61.6/70.8	2.7	81/92	90/100
	RXBH-1724A18J	4.3/5.7	1/60	1-5.68	MULTIPLE CKT 1	20.5/23.6	2.7	29/33	30/35
		8.5/11.3	1/60	2 - 5.68	MULTIPLE CKT 2	41.1/47.2	0	52/59	60/60
	RXBH-1724A07C	5.4/7.2	3/60	3 - 2.4	SINGLE	15.0/17.3	2.7	23/25	25/25
	RXBH-1724A10C	7.2/9.6	3/60	3 - 3.2	SINGLE	20.0/23.1	2.7	29/33	30/35
	RXBH-1724A13C	9.4/12.5	3/60	3 - 4.17	SINGLE	26.1/30.1	2.7	36/41	40/45
	RXBH-1724A15C	10.8/14.4	3/60	3 - 4.8	SINGLE	30.0/34.6	2.7	41/47	45/50
	RXBH-1724A18C	12.8/17.0	3/60	3-5.68	SINGLE	35.5/41.0	2.7	48/55	50/60
RHLP 4821	RXBH-1724B05J/RXBH-24A05J	3.6/4.8	1/60	1 - 4.8	SINGLE	17.3/20.0	3.8	27/30	30/30
	RXBH-1724B07J/RXBH-24A07J	5.4/7.2	1/60	2 - 3.6	SINGLE	26.0/30.0	3.8	38/43	40/45
	RXBH-1724B10J/RXBH-24A10J	7.2/9.6	1/60	2 - 4.8	SINGLE	34.6/40.0	3.8	48/55	50/60
	RXBH-1724A15J	10.8/14.4	1/60	3-4.8	SINGLE	51.9/60.0	3.8	70/80	70/80
	RXBH-1724A15J	3.6/4.8	1/60	1 - 4.8	MULTIPLE CKT 1	17.3/20.0	3.8	27/30	30/30
		7.2/9.6	1/60	2 - 4.8	MULTIPLE CKT 2	34.6/40.0	0.0	44/50	45/50
	RXBH-1724A18J	12.8/17	1/60	4-4.26	SINGLE	61.6/70.8	3.8	82/94	90/100
	RXBH-1724A18J	6.4/8.5	1/60	2 - 4.26	MULTIPLE CKT 1	30.8/35.4	3.8	44/49	45/50
		6.4/8.5	1/60	2 - 4.26	MULTIPLE CKT 2	30.8/35.4	0.0	39/45	40/45
	RXBH-24A20J	14.4/19.2	1/60	4-4.8	SINGLE	69.2/80	3.8	92/105	100/110
	RXBH-24A20J	7.2/9.6	1/60	2 - 4.8	MULTIPLE CKT 1	34.6/40.0	3.8	48/55	50/60
		7.2/9.6	1/60	2 - 4.8	MULTIPLE CKT 2	34.6/40.0	0.0	44/50	45/50
	RXBH-24A25J	18.0/24.0	1/60	6-4.0	SINGLE	86.4/99.9	3.8	113/130	125/150
	RXBH-24A25J (4-ton only)	6.0/8.0	1/60	2 - 4.0	MULTIPLE CKT 1	28.8/33.3	3.8	41/47	45/50
		6.0/8.0	1/60	2 - 4.0	MULTIPLE CKT 2	28.8/33.3	0.0	36/42	40/45
		6.0/8.0	1/60	2 - 4.0	MULTIPLE CKT 3	28.8/33.3	0.0	36/42	40/45
	RXBH-1724A07C	5.4/7.2	3/60	3 - 2.4	SINGLE	15.0/17.3	3.8	24/27	25/30
	RXBH-1724A10C	7.2/9.6	3/60	3 - 3.2	SINGLE	20.0/23.1	3.8	30/34	30/35
	RXBH-1724A15C	10.8/14.4	3/60	3 - 4.8	SINGLE	30.0/34.6	3.8	43/48	45/50
	RXBH-1724A18C	12.8/17.0	3/60	3-2.84	SINGLE	35.6/41.0	3.8	50/56	50/60
	RXBH-24A20C*	14.4/19.2	3/60	3-3.2	SINGLE	40.0/46.2	3.8	55/63	60/70
	RXBH-24A20C	7.2/9.6	3/60	3 - 3.2	MULTIPLE CKT 1	20.0/23.1	3.8	30/34	30/35
		7.2/9.6	3/60	3 - 3.2	MULTIPLE CKT 2	20.0/23.1	0.0	25/29	25/30
	RXBH-24A25C*	18.0/24.0	3/60	6-4.0	SINGLE	50.0/57.8	3.8	68/77	70/80
	RXBH-24A25C (4-ton only)	9.0/12.0	3/60	3 - 4.0	MULTIPLE CKT 1	25.0/28.9	3.8	36/41	40/45
		9.0/12.0	3/60	3 - 4.0	MULTIPLE CKT 2	25.0/28.9	0.0	32/37	35/40

Electrical Data – With Electric Heat (con't.)

Installation of the U.L. Listed original equipment manufacturer provided heater kits listed in the following table is recommended for all auxiliary heating requirements.

Model	Heater Model No.	Heater KW 208/240V	PH/HZ	No. Elements - KW Per	Type Supply Circuit Single Circuit Multiple Circuit	Circuit Amps.	Motor Ampacity	Minimum Circuit Ampacity	Maximum Circuit Protection
RHLP 4824	RXBH-172405J	3.6/4.8	1/60	1 - 4.8	SINGLE	17.3/20.0	3.8	27/30	30/30
	RXBH-172407J	5.4/7.2	1/60	2 - 3.6	SINGLE	26.0/30.0	4.6	39/44	40/45
	RXBH-172410J	7.2/9.6	1/60	2 - 4.8	SINGLE	34.6/40.0	4.6	49/56	50/60
	RXBH-172415J	10.8/14.4	1/60	3 - 4.8	SINGLE	51.9/60.0	4.6	71/81	80/90
	RXBH-172415J	3.6/4.8	1/60	1 - 4.8	MULTIPLE CKT 1	17.3/20.0	4.6	28/31	30/35
	RXBH-172415J	3.6/4.8	1/60	1 - 4.8	MULTIPLE CKT 1	17.3/20.0	4.6	28/31	30/35
		7.2/9.6	1/60	2 - 4.8	MULTIPLE CKT 2	34.6/40.0	0	44/50	45/50
	RXBH-172418J	12.8/17	1/60	4 - 4.26	SINGLE	61.6/70.8	4.6	83/95	90/100
	RXBH-172418J	6.4/8.5	1/60	2 - 4.26	MULTIPLE CKT 1	30.8/35.4	4.6	45/50	45/50
		6.4/8.5	1/60	2 - 4.26	MULTIPLE CKT 2	30.8/35.4	0	39/45	40/45
	RXBH-24A20J	14.4/19.2	1/60	4 - 4.8	SINGLE	69.2/80	4.6	93/106	100/110
	RXBH-24A20J	7.2/9.6	1/60	2 - 4.8	MULTIPLE CKT 1	34.6/40.0	4.6	49/56	50/60
		7.2/9.6	1/60	2 - 4.8	MULTIPLE CKT 2	34.6/40.0	0	44/50	45/50
	RXBH-24A25J	18.0/24.0	1/60	6 - 4.0	SINGLE	86.4/99.9	4.6	114/131	125/150
	RXBH-24A25J	6.0/8.0	1/60	2 - 4.0	MULTIPLE CKT 1	28.8/33.3	4.6	42/48	45/50
		6.0/8.0	1/60	2 - 4.0	MULTIPLE CKT 2	28.8/33.3	0	36/42	40/45
		6.0/8.0	1/60	2 - 4.0	MULTIPLE CKT 3	28.8/33.3	0	36/42	40/45
	RXBH-172407C	5.4/7.2	3/60	3 - 2.4	SINGLE	15.0/17.3	4.6	25/28	25/30
	RXBH-172410C	7.2/9.6	3/60	3 - 3.2	SINGLE	20.0/23.1	4.6	31/35	35/35
	RXBH-172415C	10.8/14.4	3/60	3 - 4.8	SINGLE	30.0/34.6	4.6	44/49	45/50
	RXBH-172418C	12.8/17.0	3/60	3 - 2.84	SINGLE	35.6/41.0	4.6	51/57	60/60
	RXBH-24A20C*	14.4/19.2	3/60	3 - 3.2	SINGLE	40.0/46.2	4.6	56/64	60/70
	RXBH-24A20C	7.2/9.6	3/60	3 - 3.2	MULTIPLE CKT 1	20.0/23.1	4.6	31/35	35/35
		7.2/9.6	3/60	3 - 3.2	MULTIPLE CKT 2	20.0/23.1	0	25/29	25/30
	RXBH-24A25C*	18.0/24.0	3/60	6 - 4.0	SINGLE	50.0/57.8	4.6	69/78	70/80
	RXBH-24A25C	9.0/12.0	3/60	3 - 4.0	MULTIPLE CKT 1	25.0/28.9	4.6	37/42	40/45
		9.0/12.0	3/60	3 - 4.0	MULTIPLE CKT 2	25.0/28.9	0	32/37	35/40

* Values only. No single point kit available.
- Supply circuit protective devices may be fused or "HACR" type circuit breakers.
- If non-standard fuse size is specified, use next size larger standard fuse size.
- If the kit is listed under both single and multiple circuits, the kit is shipped from factory as multiple circuits. For single phase application, Jumper bar kit RXBJ-A21 and RXBJ-A31 can be used to convert multiple circuits to a single supply circuit. Refer to Accessory Section for details.
- Largest motor load is included in single circuit or circuit 1 of multiple circuit.
- Heater loads are balanced on 3 PH. models with 3 or 6 heaters only.
- Electric heater BTUH - (heater watts + motor watts) x 3.414 (see airflow table for motor watts.)
- No electrical heating elements are permitted to be used with "A" voltage (115V) air handler.
- J voltage (208/240V) single phase air handler is designed to be used with single or three phase 208/240V electric heaters. In the case of connecting 3 phase power to air handler terminal block without the heater, bring only two leads to terminal block. Cap, insulate and fully secure the third lead.
- Do not use 480V electrical heaters on 208/240V air handlers.
- Do not use 208/240V electrical heaters on 480V air handlers.

Electrical Wiring

Power Wiring

- Field wiring must comply with the National Electrical Code (C.E.C. in Canada) and any applicable local ordinance.
- Supply wiring must be 75°C minimum copper conductors only.
- See electrical data for product Ampacity rating and Circuit Protector requirement.

Grounding

- This product must be sufficiently grounded in accordance with National Electrical Code (C.E.C. in Canada) and any applicable local ordinance.
- A grounding lug is provided.

Accessories-Kits—Parts

- **Combustible Floor Base RXHB-**

Model Cabinet Size	Combustible Floor Base Model Number
17	RXHB-17
21	RXHB-21
24	RXHB-24

- **Jumper Bar Kit 3 Ckt. to 1 Ckt. RXBJ-A31** is used to convert single phase multiple three circuit units to a single supply circuit. Kit includes cover and screw for line side terminals.
- **Jumper Bar Kit 2 Ckt. to 1 Ckt. RXBJ-A21** is used to convert single phase multiple two circuit units to a single supply circuit. Kit includes cover and screw for line side terminals.
- **Note:** No jumper bar kit is available to convert three phase multiple two circuit units to a single supply circuit.

- **Auxiliary Horizontal Overflow Pan Accessory RXBM-**

Nominal Cooling Capacity-Tons	Auxiliary Horizontal Overflow Pan Accessory Model Number
1 1/2 - 3	RXBM-AC48
3 1/2 - 4	RXBM-AC61

- **External Filter Rack RXHF-B17, B21, B24**

Model Cabinet Size	Filter Size In. [mm]	Part Number*	A	B
17	16 x 20 [406 x 508]	RXHF-B17	16.90	20.77
21	20 x 20 [508 x 508]	RXHF-B21	20.40	20.77
24	25 x 20 [635 x 508]	RXHF-B24	25.00	21.04

*Accommodates 1" filter

- **Auxiliary Electric Heater Kits RXBH-**
  Heater Kits include circuit breakers which meet UL and cUL requirements for service disconnect. See the Electric Heat Electrical Data in this specification sheet for specific Heater Kit Model numbers.
- **Horizontal Adapter Kit RXHH-**
  This horizontal adapter kit is used to convert Upflow/Downflow only models to horizontal flow. See the following table to order proper horizontal adapter kit.

Coil Model	Horizontal Adapter Kit Model Number (Single Qty.)	Horizontal Adapter Kit Model Number (10-Pack Qty.)
2414	RXHH-A01	RXHH-A01 x 10
2417	RXHH-A02	RXHH-A02 x 10
3617	RXHH-A03	RXHH-A03 x 10
4821/4824	RXHH-A04	RXHH-A04 x 10

- **External Filter Base RXHF-**

Model Cabinet Size	Filter Size In. [mm]	Part Number*	A	B
17	16 x 20 [406 x 508]	RXHF-17	15.70	17.5
21	20 x 20 [508 x 508]	RXHF-21	19.20	21.0
24	25 x 20 [635 x 508]	RXHF-24	22.70	25.5

*Accommodates 1" or 2" filter

[ ] Designates Metric Conversions

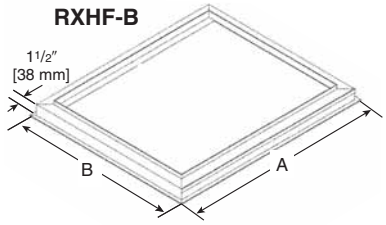

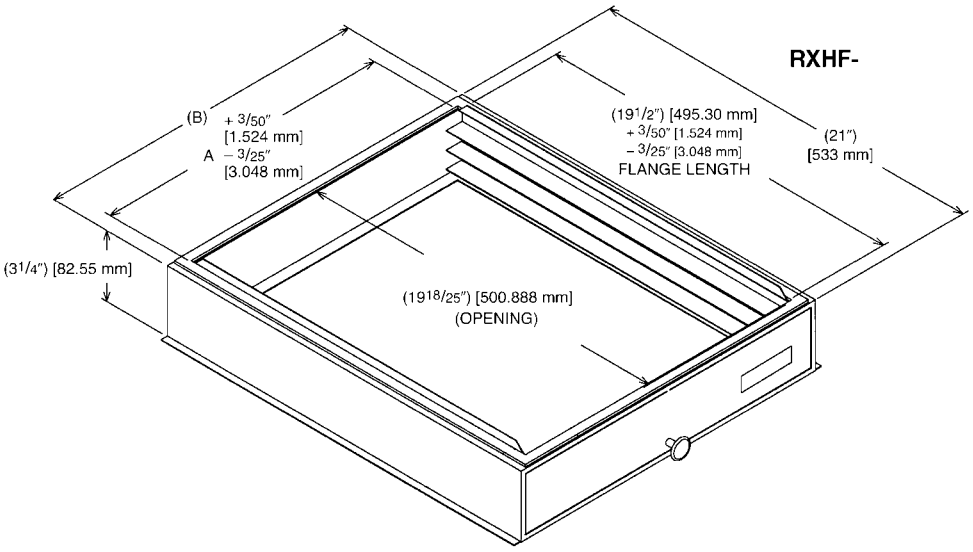

GENERAL TERMS OF LIMITED WARRANTY*

Ruud will furnish a replacement for any part of this product which fails in normal use and service within the applicable periods stated, in accordance with the terms of the limited warranty.

Conditional Parts (Registration Required) .....Ten (10) Years

***For complete details of the Limited and Conditional Warranties, including applicable terms and conditions, contact your local contractor or the Manufacturer for a copy of the product warranty certificate.**

In keeping with its policy of continuous progress and product improvement, Ruud reserves the right to make changes without notice.

Ruud Heating, Cooling & Water Heating • P.O. Box 17010
Fort Smith, Arkansas 72917 • www.ruud.com

Ruud Canada • 125 Edgeware Road, Unit 1
Brampton, Ontario • L6Y 0P5

Rely on Ruud.™

PRINTED IN U.S.A 11/12 QG FORM NO. H22-549