RUUD

Rely on Ruud.™

SUBMITTAL COVER SHEET

PROJECT NAME _____

LOCATION _____

ARCHITECT _____

ENGINEER _____

CONTRACTOR _____

SUBMITTED BY _____ DATE _____

UNIT SUMMARY

Quantity						
Unit Designation						
Model No.						
Total Cooling						
Sensible Cooling						
Air Ent. Evaporator						
Air Lvg. Evaporator						
Heating Input						
Heating Output						
CFM/ESP						
EER/SEER						
Electrical						
Minimum Ampacity						
Min.-Max. Breaker						
Net Unit Weight						
Accessory						
Catalog Form Number						

ACCESSORIES:

NOTES:

SUBMITTAL SHEET FOR RHML
2 TO 5 NOMINAL TON [7.3 TO 17.6 kW] AIR HANDLERS

JOB NAME _____ LOCATION _____

CONTRACTOR _____ ORDER NO. _____

ENGINEER _____ SUBMITTED FOR ☐ APPROVAL ☐ RECORD

DATE _____ OUTDOOR UNIT MODEL NO. _____

MODEL NO. _____ INDOOR COIL MODEL NO. _____

UNIT DATA

COOLING PERFORMANCE

TOTAL CAPACITY*..... _____ MBH [kW]

SENSIBLE CAPACITY*..... _____ MBH [kW]

OUTDOOR DESIGN TEMP. .... _____ °F [°C] DB

TOTAL SUPPLY AIR ..... _____ CFM [L/s]

TEMP. OF AIR ENTERING EVAPORATOR COIL..... _____ °F [°C] DB

_____ °F [°C] WB

POWER INPUT REQUIREMENT..... _____ kW
(*uses blower motor heat)

HEATING PERFORMANCE

TOTAL CAPACITY*..... _____ MBH [kW]

OUTDOOR DESIGN TEMP. .... _____ °F [°C] DB

TEMP. OF AIR ENTERING EVAPORATOR COIL..... _____ °F [°C] DB

ELECTRIC HEAT CAPACITY ..... _____ kW

POWER INPUT REQUIREMENT..... _____ kW
(*uses blower motor heat)

SUPPLY AIR BLOWER PERFORMANCE

TOTAL AIR SUPPLY ..... _____ CFM [L/s]

TOTAL RESISTANCE EXTERNAL TO UNIT..... _____ IWG

BLOWER SPEED ..... _____ RPM

POWER OUTPUT REQUIREMENT .. _____ BHP

MOTOR RATING ..... _____ HP [W]

POWER INPUT REQUIREMENT..... _____ kW

ELECTRICAL DATA

POWER SUPPLY..... _____ Hz

TOTAL UNIT AMPACITY..... _____ AMPS

MINIMUM WIRE SIZE ..... _____ AWG

MAXIMUM OVERCURRENT DEVICE FUSES/HACR BREAKER ..... _____ AMPS

CLEARANCES

SERVICE ACCESS FRONT 24" [609.6 mm]

FEATURES FOR RHML

- RHLA/RHLL models feature GE's new X-13 motor which provides enhanced SEER performance with most manufacturer's outdoor units.
- 1 1/2 ton [5.3 kW] through 5 ton [17.6 kW] models are between 42 1/2 to 55 1/2 inches [1080 to 1410 mm] tall and 22 inches [559 mm] deep.
- Versatile 4-way convertible design for upflow, downflow, horizontal left and horizontal right applications.
- Factory-installed high efficiency indoor coil.
- All models meet or exceed 330 to 400 CFM [156 to 189 L/s] per ton at .3 inches [.7 kPa] of external static pressure.
- Enhanced airflow up to .7" external static pressure.
- Sturdy construction with 1.0 inch [.24 kPa] of reinforced foil faced jacket insulation for excellent thermal and sound insulation.
- Field-installed auxiliary electric heater kits provide exact heat for indoor comfort. Kits include circuit breakers which meet UL and cUL requirements for service disconnect.
- The most compact unit design available, all standard heat air handler models only 42 1/2 to 55 1/2 inches [1079 to 1409 mm] high.
- Attractive pre-painted cabinet exterior.
- Rugged wall steel cabinet construction, designed for added strength and versatility.

[ ] Designates Metric Conversions

AHRI CERTIFIED™ www.ahridirectory.org Unitary Small HP AHRI Standard 210/240 Certification applies only when the complete system is listed with AHRI

AHRI CERTIFIED™ www.ahridirectory.org Unitary Small AC AHRI Standard 210/240 Certification applies only when the complete system is listed with AHRI

c UL us LISTED

Accredited by the RvA · ASQ Quality Evaluations, Inc. Management System Certification · ANAB ACCREDITED

ISO 9001:2008
Certificate Number: 30164

Unit Dimensions

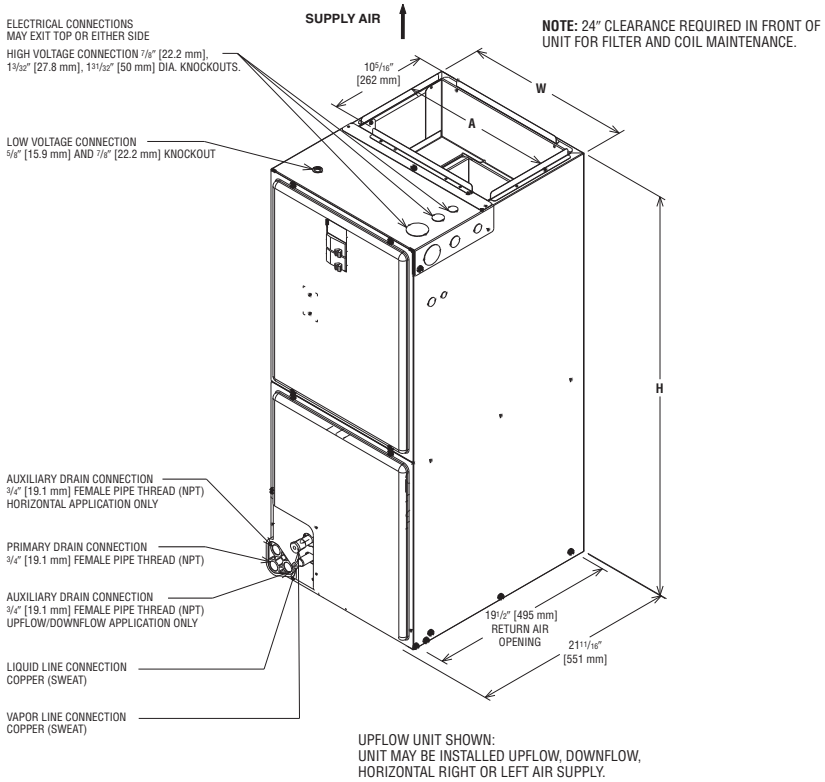

NOTE: 24" CLEARANCE REQUIRED IN FRONT OF UNIT FOR FILTER AND COIL MAINTENANCE.

UPFLOW UNIT SHOWN:
UNIT MAY BE INSTALLED UPFLOW, DOWNFLOW, HORIZONTAL RIGHT OR LEFT AIR SUPPLY.

Return Air Opening Dimensions

Model Cabinet Size	Return Air Opening Width (Inches)	Return Air Opening Depth/Length (Inches)
17	15 7/8	19 3/4
21	19 3/8	19 3/4
24	22 7/8	19 3/4

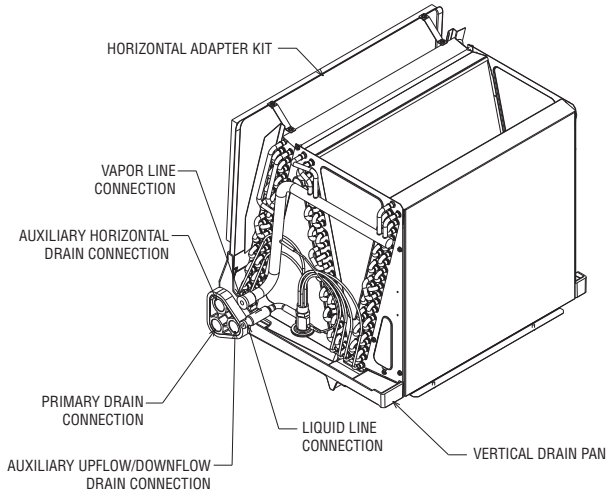

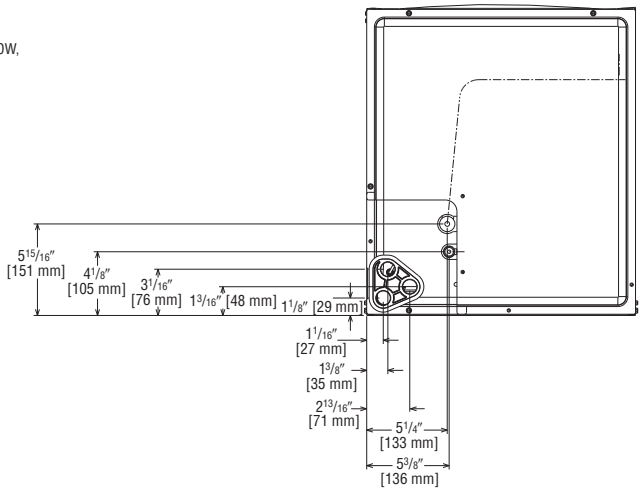

[ ] Designates Metric Conversions

( ) Designates Unit with Double Coil Cabinet

Unit Dimensions & Weights

Model Number	Unit Width "W" In. [mm]	Unit Height "H" In. [mm]	Supply Duct "A" In. [mm]	Air Flow CFM (Nom.) [L/s]		Unit Weight/Shipping Weight (Lbs.) [kg]
				Lo	Hi	Unit With Coil (Max. kW)
2421	21 [533]	42 1/2 [1080]	19 1/2 [495]	525 [247]	700 [330]	97/112 [44/51]
3621	21 [533]	50 1/2 [1282]	19 1/2 [495]	800 [377]	1050 [495]	150/166 [68/75]
4824	24 1/2 [622]	55 1/2 [1410]	23 [584]	1050 [495]	1400 [660]	181/198 [82/90]
6024	24 1/2 [622]	55 1/2 [1410]	23 [584]	1200 [566]	1600 [755]	181/198 [82/90]

Before proceeding with installation, refer to installation instructions packaged with each model, as well as complying with all Federal, State, Provincial, and Local codes, regulations, and practices.

Rheem Sales Company, Inc.
P.O. Box 17010, Fort Smith, AR 72917

"In keeping with its policy of continuous progress and product improvement, Rheem reserves the right to make changes without notice."

PRINTED IN U.S.A. 3-12 QG FORM NO. X33-1394