Ruud High Efficiency Air Handler

RHPL- Series

ECM Motor

Efficiences up to 16.5 SEER

- Includes an energy efficient GE® ECM® Motor, that slowly ramps its speed up for quiet operation and enhanced customer satisfaction.
- Versatile 4-way convertible design for upflow, downflow, horizontal left and horizontal right applications.
- Nominal airflow up to 1.0" external static pressure.
- Factory-installed high efficiency indoor coil.
- Sturdy cabinet construction with 1.0 inch [25.4 mm] of foil faced insulation for excellent sound and insulating characteristics.
- Field-installed auxiliary electric heater kits provide exact heat for indoor comfort. Kits include circuit breakers which meet U.L. and cUL requirements for service disconnect.
- Dip switch settings for selectable, customized cooling airflow over a wide variety of applications when wired in 24V conventional configurations.
- On-demand dehumidification terminal that adjusts airflow to help control humidity for unsurpassed comfort in cooling mode.
- External filter required.

TABLE OF CONTENTS

Engineering Features

RHPL- Series

- Quiet, efficient ECM motor technology providing nominal airflow up to 1.0 inch [25 kPa] of external static pressure.
- Interface board with dip switches conveniently located in the blower compartment allows for precise, field selectable airflow to meet the requirements of particular applications.
- Selectable continuous fan “on” options.
- The most compact unit design available.
- Attractive pre-painted cabinet exterior.
- Rugged steel cabinet construction, designed for added strength and versatility.
- 1.0" foil faced insulation mechanically retained in blower compartment.
- Four leg rubber insulated motor mount.
- Field-installed auxiliary heater kit includes circuit breakers that meet UL and cUL requirements as a service disconnect switch.
- Blower housing with integrated controls, motor and blower. Slide out design for service and maintenance convenience.
- Field convertible for vertical upflow, vertical downflow, horizontal left hand or right hand air supply.
- Combustible floor base accessory available when required for downflow installations on combustible floors.
- Indoor coil design provides low air side pressure drop, high performance and extremely compact size. All coils come with PVC condensate elbow standard.
- Coils are constructed of aluminum fins bonded to internally grooved copper tubing.
- Molded polymer corrosion resistant condensate drain pan is provided on all indoor coils.
- Supply duct flanges provided as standard on air handler cabinet.
- Provisions for field electrical connections available from either side or top of the air handler cabinet.
- Connection point for high voltage wiring is inside the air handler cabinet. Low voltage connection is made on the outside of the air handler cabinet.
- Concentric knockouts are provided for power connection to cabinet. Installer may pull desired hole size up to 2 inches [51 mm] for 1 1/2 inch [38 mm] conduit.
- Internal checked TX valves are used on the Heat Pump indoor coil for more quiet refrigerant metering.
- Front refrigerant and drain connections.

[ ] Designates Metric Conversions

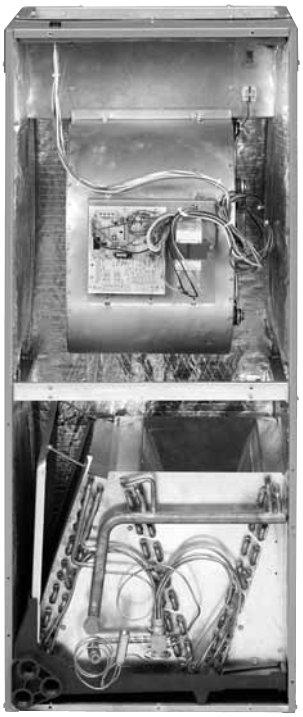

Model Number Identification

R H P L – HM 24 21 J A

Design Variation
A = 1st Design

Voltage
J = 208/240/1/60

Cabinet Size
21 = 21" [533.4 mm] (600-1200 CFM)
24 = 24.5" [609.6 mm] (1200-1700 CFM)

Capacity
24 = 18,000/24,000 BTUH [5.27 to 7.03 kW]
36/=38 = 30,000/36,000 BTUH [8.79 to 10.55 kW]
48 = 42,000/48,000 BTUH [12.31 to 14.06 kW]
60 = 60,000 BTUH [17.58 kW]

HM = A/C or HP, Multi-Position
(Upflow & Horizontal Left is the factory configuration)

Refrigerant
L = R-410A

P = 16 SEER Premium Model

Classification
H = Air Handler

Ruud

[ ] Designates Metric Conversions

Available Models
RHPL-HM2421JA
RHPL-HM3621JA
RHPL-HM3821JA
RHPL-HM4824JA
RHPL-HM6024JA

Unit Dimensions

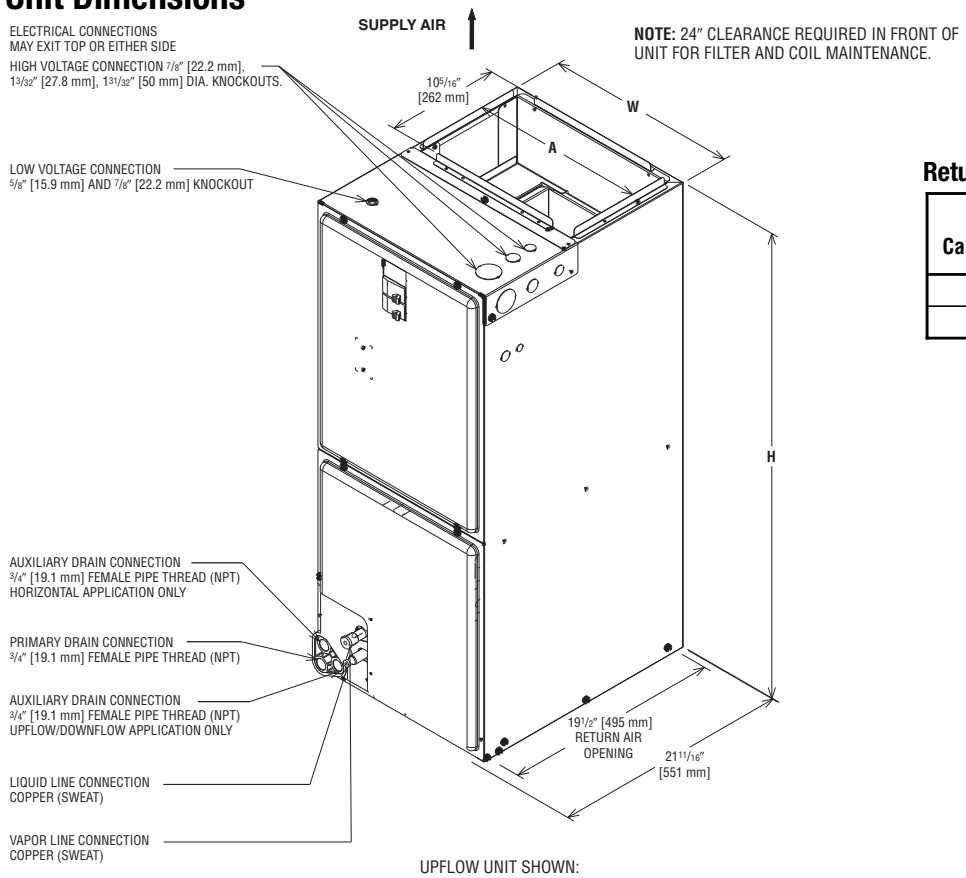

Return Air Opening Dimensions

Model Cabinet Size	Return Air Opening Width (Inches)	Return Air Opening Depth/Length (Inches)
21	19 3/8	19 1/2
24	22 7/8	19 1/2

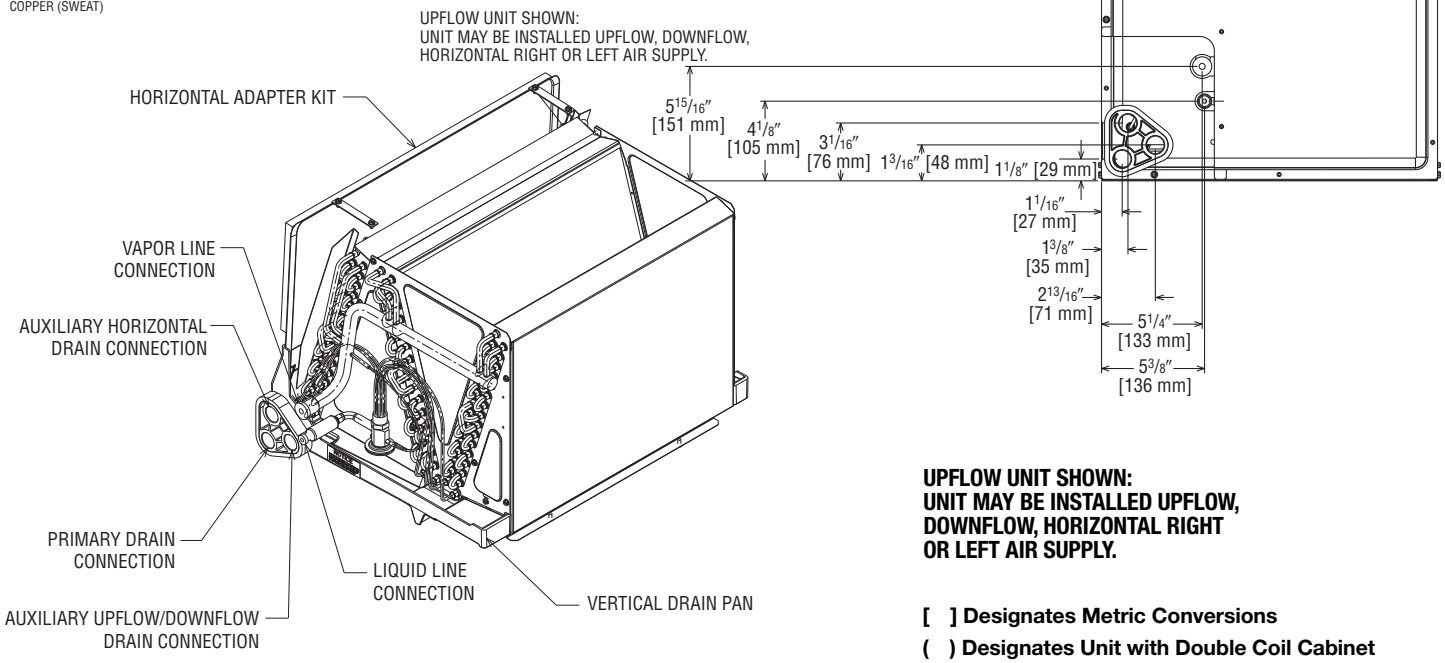

**UPFLOW UNIT SHOWN:
UNIT MAY BE INSTALLED UPFLOW, DOWNFLOW, HORIZONTAL RIGHT OR LEFT AIR SUPPLY.**

[ ] Designates Metric Conversions

( ) Designates Unit with Double Coil Cabinet

Unit Dimensions & Weights

Model Size RHPL	Refrigerant Connections Sweat (in.) [mm] ID		Unit Width "W" In. [mm]	Unit Height "H" In. [mm]	Supply Duct "A" In. [mm]	Nominal Coil Airflow [L/s]				Unit Weight/Shipping Weight (Lbs.) [kg]
						1st Stage		2nd Stage		Unit With Coil (Max. KW)
	Liquid	Vapor				ODD*	Normal	ODD*	Normal	
2421	3/8 [9.53]	3/4 [19.05]	21 [533]	42 1/2 [1080]	19 1/2 [495]	480 [227]	625 [295]	640 [302]	775 [366]	92/106 [42/48]
3621	3/8 [9.53]	3/4 [19.05]	21 [533]	42 1/2 [1080]	19 1/2 [495]	720 [340]	900 [425]	960 [453]	1200 [566]	92/106 [42/48]
3821	3/8 [9.53]	7/8 [22.23]	21 [533]	50 1/2 [1282]	19 1/2 [495]	750 [354]	900 [425]	960 [453]	1200 [566]	150/166 [68/75]
4824	3/8 [9.53]	7/8 [22.23]	24 1/2 [622]	55 1/2 [1410]	23 [584]	960 [453]	1200 [566]	1280 [804]	1625 [767]	162/180 [73/81]
6024	3/8 [9.53]	7/8 [22.23]	24 1/2 [622]	55 1/2 [1410]	23 [584]	1040 [491]	1375 [649]	1360 [642]	1675 [791]	181/198 [82/90]

*Maximum dehumidification airflow.

Airflow Directional Data

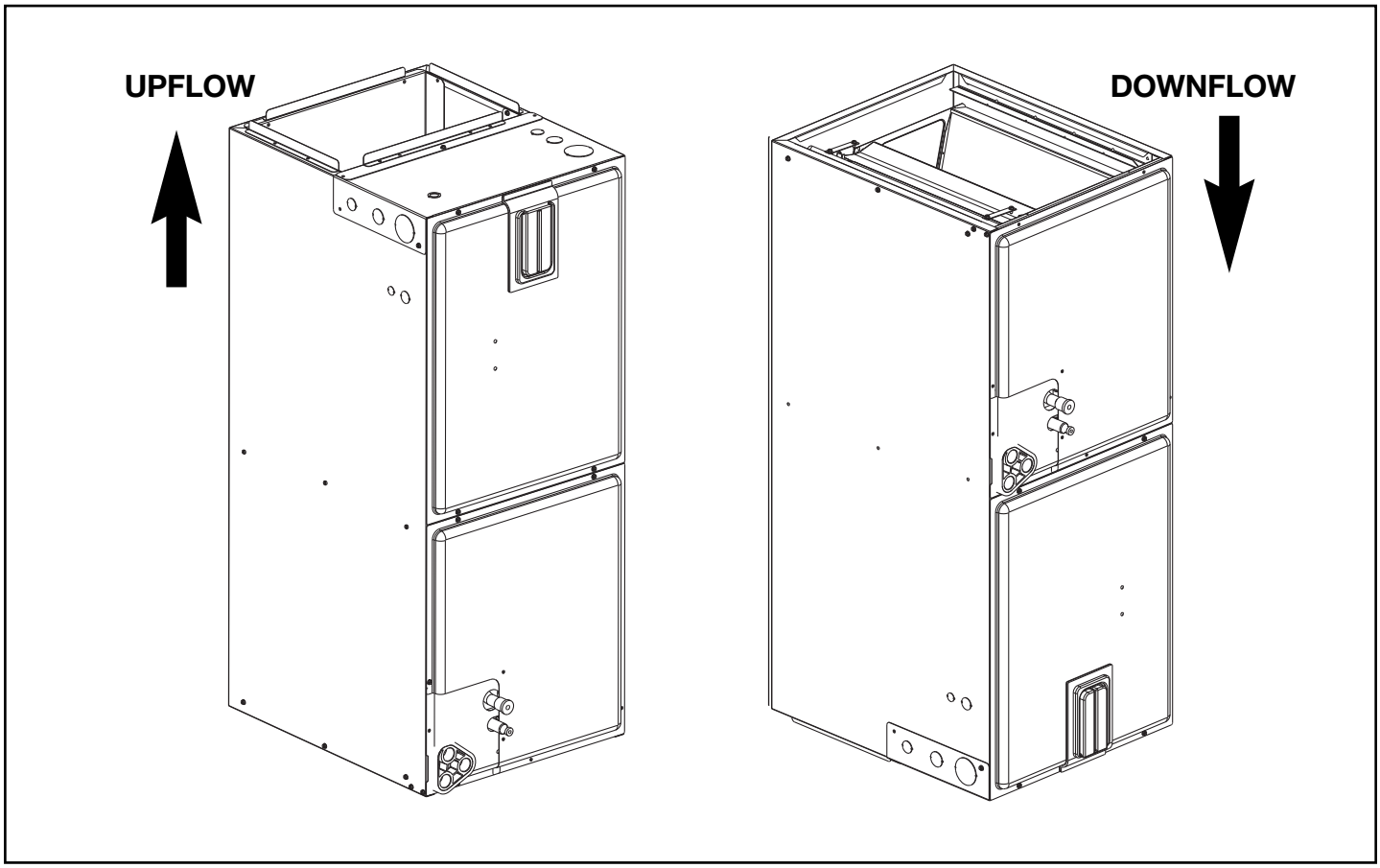

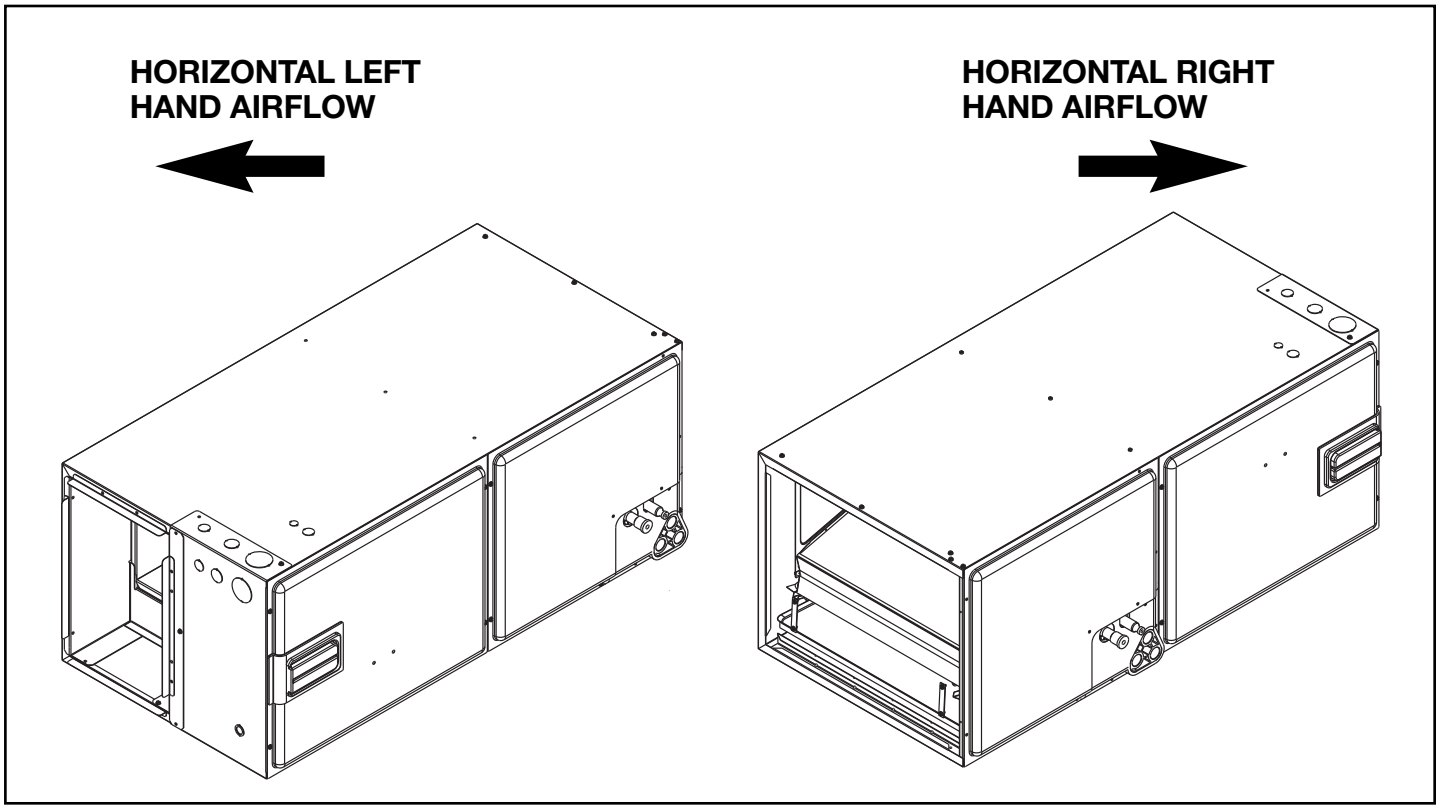

Airflow Performance

Airflow performance data is based on cooling performance with a coil and no filter in place. Select performance table for appropriate unit size, voltage and number of electric heaters to be used. Make sure external static applied to unit allows operation within the minimum and maximum limits shown in table below for both cooling and electric heat operation. For optimum blower performance, operate the unit in the .3 [8 mm] to .7 inches [18 mm] W.C. external static range. Units with coils should be applied with a minimum of .1 inch [3 mm] W.C. external static range.

Airflow Performance Data

Nominal Cooling Capacity	Cabinet Size	Blower		Nominal Airflow CFM		ECM CFM [L/s] Air Delivery/RPM/Watts-230 Volts									
						External Static Pressure – Inches W.C. [kPa]									
		Size Motor HP	Thermostat Input			0.10	0.20	0.30	0.40	0.50	0.60	0.70	0.80	0.90	1.00
HM2421	21	10 x 8 1/3	Y1	625	CFM	550 [260]	575 [271]	600 [283]	600 [283]	625 [295]	625 [295]	625 [295]	600 [283]	575 [271]	550 [260]
					RPM	455	540	620	695	760	825	885	940	985	1030
					Watts	40	55	70	85	105	120	135	150	170	185
			Y2	775	CFM	775 [366]	775 [366]	775 [366]	800 [378]	800 [378]	825 [389]	825 [389]	825 [389]	825 [389]	825 [389]
					RPM	540	615	685	750	810	870	925	975	1020	1065
					Watts	70	90	115	135	160	180	205	225	250	270
HM3621	21	10 x 8 1/2	Y1	900	CFM	875 [413]	900 [425]	900 [425]	900 [425]	900 [425]	900 [425]	900 [425]	900 [425]	900 [425]	875 [413]
					RPM	570	645	715	775	835	890	945	990	1030	1070
					Watts	90	110	135	155	180	200	220	240	265	285
			Y2	1200	CFM	1175 [555]	1200 [566]	1200 [566]	1200 [566]	1225 [578]	1225 [578]	1200 [566]	1200 [566]	1200 [566]	1200 [566]
					RPM	700	760	820	875	925	970	1015	1055	1095	1125
					Watts	180	205	235	265	290	320	345	370	400	425
HM3821	21	10 x 10 1/2	Y1	900	CFM	809 [382]	867 [409]	872 [412]	874 [412]	897 [423]	899 [424]	892 [421]	866 [409]	870 [411]	830 [392]
					RPM	507	608	684	770	855	915	975	1037	1092	1145
					Watts	68	91	113	144	177	203	232	265	291	319
			Y2	1200	CFM	1119 [528]	1163 [549]	1169 [552]	1180 [557]	1195 [564]	1184 [559]	1179 [556]	1181 [557]	1162 [548]	1152 [544]
					RPM	628	713	773	842	904	958	1012	1065	1120	1164
					Watts	128	166	197	229	266	292	324	364	385	423
HM4824	24	11 x 11 3/4	Y1	1200	CFM	1200 [566]	1175 [555]	1175 [555]	1200 [566]	1225 [578]	1225 [578]	1200 [566]	1200 [566]	1200 [566]	1200 [566]
					RPM	535	595	650	700	750	800	840	880	915	950
					Watts	130	160	190	220	250	280	305	335	365	390
			Y2	1625	CFM	1625 [767]	1650 [779]	1650 [779]	1650 [779]	1675 [791]	1675 [791]	1675 [791]	1650 [779]	1650 [779]	1625 [767]
					RPM	635	690	745	795	840	880	915	950	980	1005
					Watts	245	295	340	385	425	465	500	535	565	590
HM6024	24	11 x 11 3/4	Y1	1375	CFM	1375 [649]	1375 [649]	1375 [649]	1375 [649]	1375 [649]	1375 [649]	1375 [649]	1350 [637]	1350 [637]	1350 [637]
					RPM	575	630	685	735	780	825	865	905	945	980
					Watts	160	185	215	245	275	305	335	365	395	430
			Y2	1675	CFM	1650 [779]	1675 [791]	1700 [802]	1700 [802]	1700 [802]	1700 [802]	1700 [802]	1700 [802]	1700 [802]	1700 [802]
					RPM	690	740	790	835	875	915	955	985	1015	1045
					Watts	290	335	375	415	455	495	530	560	595	625

IMPORTANT: Observe airflow operating limits. Do not operate above 1.0 in. W.C. system external static.

[ ] Designates Metric Conversions

Electrical Data

Model	HP [W]	Voltage	Phase	Hertz	RPM	Circuit Amps.	Minimum Circuit Ampacity	Maximum Circuit Protector
HM2421	1/3 [249]	208/230	1	60	300-1100	1.7	4.0	15
HM3621	1/2 [373]	208/230	1	60	300-1100	3.4	6.0	15
HM3821	1/2 [373]	208/230	1	60	300-1100	3.4	6.0	15
HM4824	3/4 [559]	208/230	1	60	300-1100	4.9	9.0	15
HM6024	3/4 [559]	208/230	1	60	300-1100	4.9	9.0	15

Electrical Data – With Electric Heat

Installation of the U.L. Listed original equipment manufacturer provided heater kits listed in the following table is recommended for all auxiliary heating requirements.

Air Handler Cabinet Size/ Cooling Capacity	Manufacturer Model Number	Type Supply Circuit	Voltage	PH/HZ	Heater kW	Heater AMPS	Motor Ampacity	Maximum Circuit Protection	Minimum Circuit Ampacity
21" / HM2421	RXBH-24?05J	Single	208/240	1/60	3.6/4.8	17.3/20.0	1.7	25/30	24/28
	RXBH-24?07J	Single	208/240	1/60	5.4/7.2	26.0/30.0	1.7	35/40	35/40
	RXBH-24?10J	Single	208/240	1/60	7.2/9.6	34.6/40.0	1.7	50/60	46/53
21" / HM3621/HM3821	RXBH-24?05J	Single	208/240	1/60	3.6/4.8	17.3/20.0	3.4	30/30	26/30
	RXBH-24?07J	Single	208/240	1/60	5.4/7.2	26.0/30.0	3.4	40/45	37/42
	RXBH-24?10J	Single	208/240	1/60	7.2/9.6	34.6/40.0	3.4	50/60	48/55
	RXBH-24?15J	Single	208/240	1/60	10.8/14.4	51.9/60.0	3.4	70/80	70/80
		MULTI.CKT 1	208/240	1/60	3.6/4.8	17.3/20.0	3.4	30/30	26/30
		MULTI.CKT 2	208/240	1/60	7.2/9.6	34.6/40.0	0.0	45/50	44/50
	RXBH-24?18J	Single	208/240	1/60	12.8/17	61.6/70.8	3.4	90/100	82/93
		MULTI.CKT 1	208/240	1/60	6.4/8.5	30.8/35.4	3.4	45/50	43/49
		MULTI.CKT 2	208/240	1/60	6.4/8.5	30.8/35.4	0.0	40/45	39/45
24" / HM4824	RXBH-24?05J	Single	208/240	1/60	3.6/4.8	17.3/20.0	4.9	30/35	28/32
	RXBH-24?07J	Single	208/240	1/60	5.4/7.2	26.0/30.0	4.9	40/45	39/44
	RXBH-24?10J	Single	208/240	1/60	7.2/9.6	34.6/40.0	4.9	50/60	50/57
	RXBH-24?15J	Single	208/240	1/60	10.8/14.4	51.9/60.0	4.9	80/90	72/82
		MULTI.CKT 1	208/240	1/60	3.6/4.8	17.3/20.0	4.9	30/35	28/32
		MULTI.CKT 2	208/240	1/60	7.2/9.6	34.6/40.0	0	45/50	44/50
	RXBH-24?18J	Single	208/240	1/60	12.8/17	61.6/70.8	4.9	90/100	84/95
		MULTI.CKT 1	208/240	1/60	6.4/8.5	30.8/35.4	4.9	45/60	45/51
		MULTI.CKT 2	208/240	1/60	6.4/8.5	30.8/35.4	0	40/45	39/45
	RXBH-24?20J	Single	208/240	1/60	14.4/19.2	69.2/80.0	4.9	100/110	93/107
		MULTI.CKT 1	208/240	1/60	7.2/9.6	34.6/40.0	4.9	50/60	50/57
		MULTI.CKT 2	208/240	1/60	7.2/9.6	34.6/40.0	0	45/50	44/50
	RXBH-24?25J (4 ton only)	Single	208/240	1/60	18.0/24.0	87.0/99.9	4.9	125/150	115/132
		MULTI.CKT 1	208/240	1/60	6.0/8.0	29.0/33.3	4.9	45/50	43/48
		MULTI.CKT 2	208/240	1/60	6.0/8.0	29.0/33.3	0	40/45	37/42
		MULTI.CKT 3	208/240	1/60	6.0/8.0	29.0/33.3	0	40/45	37/42

- **Supply circuit protective devices may be fuses or "HACR" type circuit breakers.**
- **Largest motor load is included in single circuit and multiple circuit 1.**
- **If non-standard fuse size is specified, use next size larger standard fuse size.**
- **J Voltage (230V) single phase air handler is designed to be used with single or three phase 230 volt electric heaters. In the case of connecting 3-phase power to the air handler terminal block without the heater, bring only two leads to the terminal block cap, insulate and fully secure the third lead.**

? Heater Kit Connection Type A = Breaker B = Terminal Block C = Pullout Disconnect

[ ] Designates Metric Conversions

Electrical Data – With Electric Heat (Cont.)

Installation of the U.L. Listed original equipment manufacturer provided heater kits listed in the following table is recommended for all auxiliary heating requirements.

Air Handler Cabinet Size/ Cooling Capacity	Manufacturer Model Number	Type Supply Circuit	Voltage	PH/HZ	Heater kW	Heater AMPS	Motor Ampacity	Maximum Circuit Protection	Minimum Circuit Ampacity
24" / HM6024	RXBH-24?05J	Single	208/240	1/60	3.6/4.8	17.3/20.0	4.9	30/35	28/32
	RXBH-24?07J	Single	208/240	1/60	5.4/7.2	26.0/30.0	4.9	40/45	39/44
	RXBH-24?10J	Single	208/240	1/60	7.2/9.6	34.6/40.0	4.9	50/60	50/57
	RXBH-24?15J	Single	208/240	1/60	10.8/14.4	51.9/60.0	4.9	80/90	72/82
		MULTI.CKT 1	208/240	1/60	3.6/4.8	17.3/20.0	4.9	30/35	28/32
		MULTI.CKT 2	208/240	1/60	7.2/9.6	34.6/40.0	0	45/50	44/50
	RXBH-24?18J	Single	208/240	1/60	12.8/17	61.6/70.8	4.9	90/100	84/95
		MULTI.CKT 1	208/240	1/60	6.4/8.5	30.8/35.4	4.9	45/60	45/51
		MULTI.CKT 2	208/240	1/60	6.4/8.5	30.8/35.4	0	40/45	39/45
	RXBH-24?20J	Single	208/240	1/60	14.4/19.2	69.2/80.0	4.9	100/110	93/107
		MULTI.CKT 1	208/240	1/60	7.2/9.6	34.6/40.0	4.9	50/60	50/57
		MULTI.CKT 2	208/240	1/60	7.2/9.6	34.6/40.0	0	45/50	44/50
	RXBH-24?25J	Single	208/240	1/60	18.0/24.0	87.0/99.9	4.9	125/150	115/132
		MULTI.CKT 1	208/240	1/60	6.0/8.0	29.0/33.3	4.9	45/50	43/48
		MULTI.CKT 2	208/240	1/60	6.0/8.0	29.0/33.3	0	40/45	37/42
		MULTI.CKT 3	208/240	1/60	6.0/8.0	29.0/33.3	0	40/45	37/42
	RXBH-24?30J	Single	208/240	1/60	21.8/28.8	103.8/120	4.9	135/168	150/175
		MULTI.CKT 1	208/240	1/60	7.2/9.6	34.8/40.0	4.9	49/56	50/60
		MULTI.CKT 2	208/240	1/60	7.2/9.6	34.8/40.0	0	44/50	45/50
		MULTI.CKT 3	208/240	1/60	7.2/9.5	34.8/40.0	0	44/50	45/50

- **Supply circuit protective devices may be fuses or "HACR" type circuit breakers.**
- **Largest motor load is included in single circuit and multiple circuit 1.**
- **If non-standard fuse size is specified, use next size larger standard fuse size.**
- **J Voltage (230V) single phase air handler is designed to be used with single or three phase 230 volt electric heaters. In the case of connecting 3-phase power to the air handler terminal block without the heater, bring only two leads to the terminal block cap, insulate and fully secure the third lead.**

? Heater Kit Connection Type A = Breaker B = Terminal Block C = Pullout Disconnect

[ ] Designates Metric Conversions

Electrical Wiring

Power Wiring

- Field wiring must comply with the National Electrical Code (C.E.C. in Canada) and any applicable local ordinance.
- Supply wiring must be 75°C minimum copper conductors only.
- See electrical data for product Ampacity rating and Circuit Protector requirement.

Grounding

- This product must be sufficiently grounded in accordance with National Electrical Code (C.E.C. in Canada) and any applicable local ordinance.
- A grounding lug is provided.

Accessories

- **Combustible Floor Base RXHB-**

Model Cabinet Size	Combustible Floor Base Model Number
21	RXHB-21
24	RXHB-24

- **Jumper Bar Kit 3 Ckt. to 1 Ckt. RXBJ-A31** is used to convert single phase multiple three circuit units to a single supply circuit. Kit includes cover and screw for line side terminals.
- **Jumper Bar Kit 2 Ckt. to 1 Ckt. RXBJ-A21** is used to convert single phase multiple two circuit units to a single supply circuit. Kit includes cover and screw for line side terminals.
- **Note:** No jumper bar kit is available to convert three phase multiple two circuit units to a single supply circuit.

- **Auxiliary Horizontal Overflow Pan Accessory RXBM-**

Nominal Cooling Capacity-Tons	Auxiliary Horizontal Overflow Pan Accessory Model Number
1½ - 3	RXBM-AC48
3½ - 5	RXBM-AC61

- **External Filter Rack RXHF-B17, B21, B24**

Model Cabinet Size	Filter Size In. [mm]	Part Number*	A	B
21	20 x 20 [508 x 508]	RXHF-B21	20.40	20.77
24	25 x 20 [635 x 508]	RXHF-B24	25.00	21.04

*Accommodates 1" filter

- **Auxiliary Electric Heater Kits RXBH-**
  Heater Kits include circuit breakers which meet UL and cUL requirements for service disconnect. See the Electric Heat Electrical Data in this specification sheet for specific Heater Kit Model numbers.

- **External Filter Base RXHF-**

Model Cabinet Size	Filter Size In. [mm]	Part Number*	A	B
21	20 x 20 [508 x 508]	RXHF-21	19.20	21.0
24	25 x 20 [635 x 508]	RXHF-24	22.70	25.5

*Accommodates 1" filter

[ ] Designates Metric Conversions

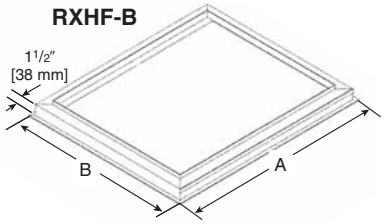

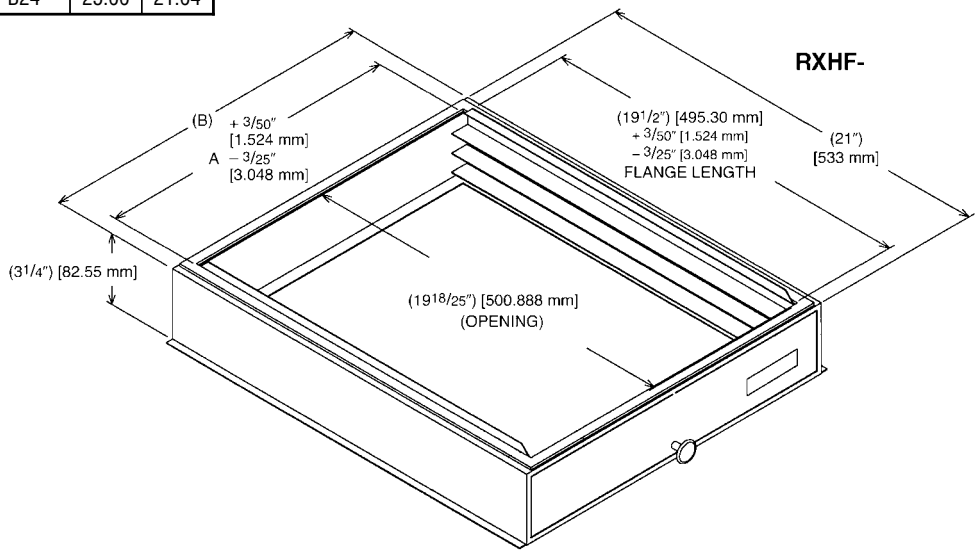

GENERAL TERMS OF LIMITED WARRANTY*

Ruud will furnish a replacement for any part of this product which fails in normal use and service within the applicable periods stated, in accordance with the terms of the limited warranty.

Parts.....Ten (10) Years

***For complete details of the Limited and Conditional Warranties, including applicable terms and conditions, contact your local contractor or the Manufacturer for a copy of the product warranty certificate.**

In keeping with its policy of continuous progress and product improvement, Ruud reserves the right to make changes without notice.

Ruud Heating, Cooling & Water Heating • P.O. Box 17010
Fort Smith, Arkansas 72917 • www.ruud.com

Ruud Canada • 125 Edgeware Road, Unit 1
Brampton, Ontario • L6Y 0P5

Rely on Ruud.™

PRINTED IN U.S.A 12/12 QG FORM NO. H22-541