AIR HANDLERS

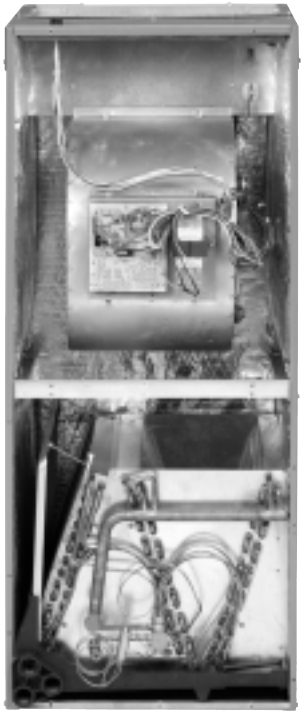

RUUD ULTRA® Series

AIR HANDLERS

UHPN- SERIES – 18 SEER

featuring Earth-Friendly R-410A Refrigerant

R-410A

Features

- Includes an energy efficient GE® ECM® Motor, which in most applications, enhances the SEER rating of the outdoor unit. It also slowly ramps its speed up for quiet operation and enhanced customer satisfaction.
- Versatile 4-way convertible design for upflow, downflow, horizontal left and horizontal right applications.
- Nominal airflow up to 1.0" external static pressure.
- Factory-installed high efficiency indoor coil.
- Sturdy cabinet construction with 1.0 inch [25.4 mm] of foil faced insulation for excellent sound and insulating characteristics.
- Field-installed auxiliary electric heater kits provide exact heat for indoor comfort. Kits include circuit breakers which meet U.L. and cUL requirements for service disconnect.
- Dip switch settings for selectable, customized cooling airflow over a wide variety of applications.
- On-demand dehumidification terminal that adjusts airflow to help control humidity for unsurpassed comfort in cooling mode.
- External filter required.

Accredited by the RvA

ABS Quality Evaluations, Inc. Management System Certification

ANAB ACCREDITED

ISO 9001:2000

Certificate Number: 30164

c UL® us LISTED

ARI PERFORMANCE CERTIFIED

ARI PERFORMANCE CERTIFIED

Engineering Features

UHPN- Series

- Quiet, efficient ECM motor technology providing nominal airflow up to 1.0 inch [25 kPa] of external static pressure.
- Interface board with dip switches conveniently located in the blower compartment allows for precise, field selectable airflow to meet the requirements of particular applications.
- Selectable continuous fan “on” options.
- Compact unit design.
- Attractive pre-painted cabinet exterior.
- Rugged steel cabinet construction, designed for added strength and versatility.
- 1.0" foil faced insulation mechanically retained in blower compartment.
- Four leg rubber insulated motor mount.
- Field-installed auxiliary heater kit includes circuit breakers that meet UL and cUL requirements as a service disconnect switch.
- Blower housing with integrated controls, motor and blower. Slide out design for service and maintenance convenience.
- Field convertible for vertical upflow, vertical downflow, horizontal left hand or right hand air supply.
- Combustible floor base accessory available when required for downflow installations on combustible floors.
- Indoor coil design provides low air side pressure drop, high performance and extremely compact size. All coils come with PVC condensate elbow standard.
- Coils are constructed of aluminum fins bonded to internally grooved copper tubing.
- Molded polymer corrosion resistant condensate drain pan is provided on all indoor coils.
- Supply duct flanges provided as standard on air handler cabinet.
- Provisions for field electrical connections available from either side or top of the air handler cabinet.
- Connection point for high voltage wiring is inside the air handler cabinet. Low voltage connection is made on the outside of the air handler cabinet.
- Concentric knockouts are provided for power connection to cabinet. Installer may pull desired hole size up to 2 inches [51 mm] for 1 1/2 inch [38 mm] conduit.
- Internal checked TX valves are used on the Heat Pump indoor coil for more quiet refrigerant metering.
- Front refrigerant and drain connections.

[ ] Designates Metric Conversions

GENERAL TERMS OF LIMITED WARRANTY

Ruud will furnish a replacement for any part of this product which fails in normal use and service within the applicable periods stated, in accordance with the terms of the limited warranty.

For Complete Details of the Limited Warranty, Including Applicable Terms and Conditions, See Your Local Installer or Contact the Manufacturer for a Copy.

Ruud *Ultra Series®* equipment features a 10-year limited parts warranty.*

***This 10-year limited parts warranty is applicable only to single-phase products installed in residential applications.**

MODEL NUMBER DATA

U H P N — HM 24 21 J A

- **A** — **Design Variation**
  A = 1st Design
- **J** — **Voltage**
  J = 208/240/1/60
- **21** — **Cabinet Size**
  21 = 21" [533.4 mm] (600-1200 CFM)
- **24** — **Capacity**
  24 = 18,000/24,000 BTUH
  [5.27 to 7.03 kW]
- **HM** — **HM = A/C or HP, Multi-Position**
  (Upflow & Horizontal Left is the factory configuration)
- **N** — **Refrigerant**
  N = R-410A
- **P** — **P = 18 SEER Premium Model**
- **H** — **Classification**
  H = Air Handler
- **U** — **Ruud**

Electrical Designation & Airflow Performance Information			
Model	**Cabinet Size**	**J = 208/240V, 1 PH, 60 Hz** **Control Designation S = Circuit Breaker(s)**	**1) Motor H.P. [W]** **2) Blower CFM [L/s] 1st/2nd Stage** **3) Blower Wheel Dia./Width [mm]** **4) Tonnage**
2421	21 = 21.0"	05 07 10	1) 1/3 H.P. [249] 2) 600/800 CFM [283/378] 3) 10 x 8 [254 x 203] 4) 2 Ton

NOTES:
① Electrical Heat Designation: See electrical heat electrical data for actual heater kW represented by number above.
② Electric Heater: BTUH - (heater watts + motor watts) x 3.412 (see airflow table for motor watts).
③ The air handlers are shipped from the factory with the proper indoor coil installed, and cannot be ordered without a coil.
④ Electric heat elements are field-installed items.
⑤ The air handlers do not have an internal filter rack. An external filter rack or other means of filtration is required.

[ ] Designates Metric Conversions

Unit Dimensions

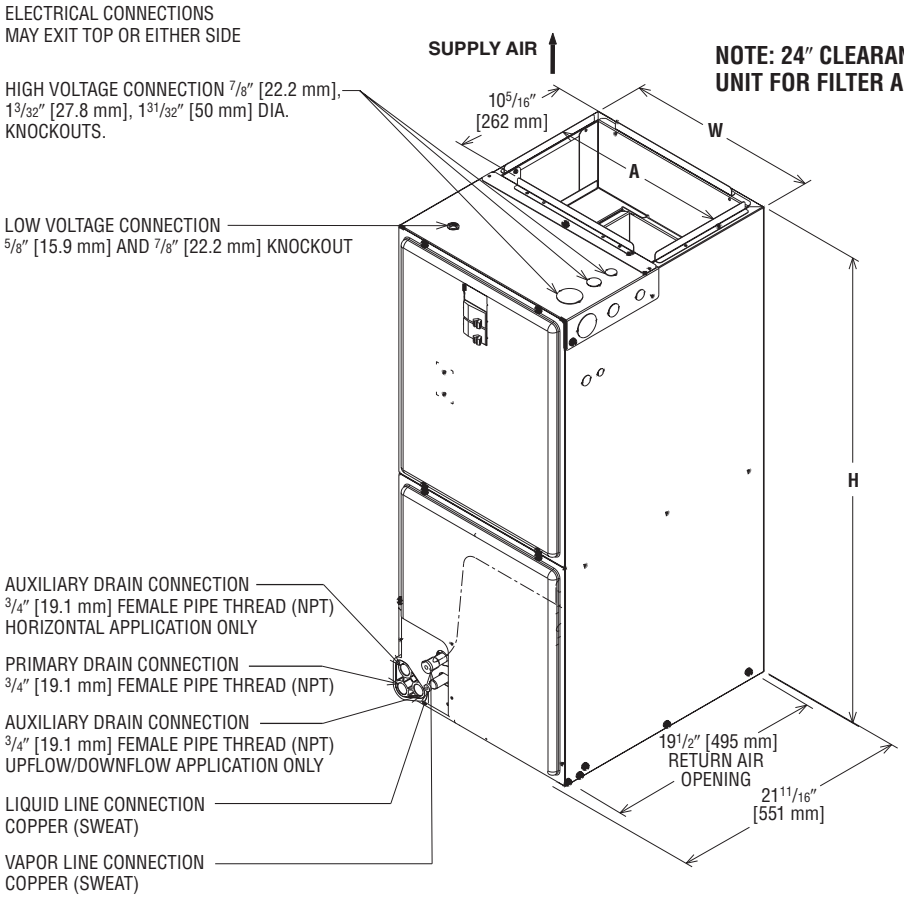

NOTE: 24″ CLEARANCE REQUIRED IN FRONT OF UNIT FOR FILTER AND COIL MAINTENANCE.

Return Air Opening Dimensions

Model Cabinet Size	Return Air Opening Width (Inches)	Return Air Opening Depth/Length (Inches)
21	19 3/8	19 1/2

DOWNFLOW APPLICATION AND HORIZONTAL RIGHT
INDOOR COIL AND COIL DOOR ROTATES 180°

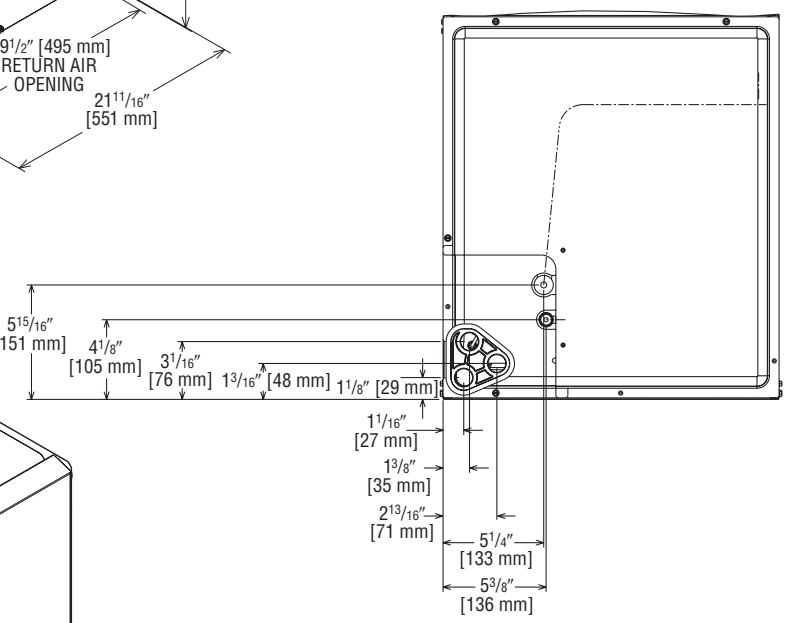

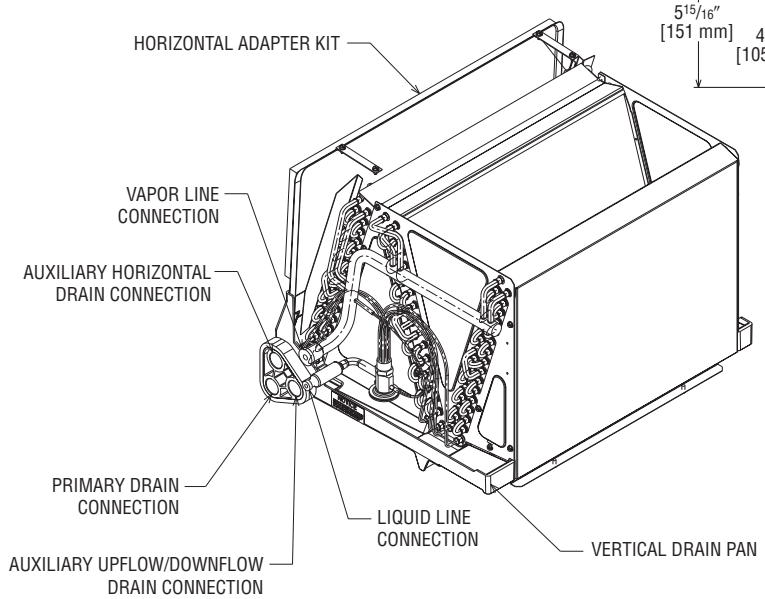

UPFLOW UNIT SHOWN:
UNIT MAY BE INSTALLED UPFLOW, DOWNFLOW, HORIZONTAL RIGHT OR LEFT AIR SUPPLY.

[ ] Designates Metric Conversions
( ) Designates Unit with Double Coil Cabinet

Unit Dimensions & Weights

Model	Unit Width "W" In. [mm]	Unit Height "H" In. [mm]	Supply Duct "A" In. [mm]	Nominal Coil Airflow [L/s]				Unit Weight/Shipping Weight (Lbs.) [kg]
				1st Stage		2nd Stage		Unit With Coil (Max. KW)
				ODD*	Normal	ODD*	Normal	
2421	21 [533]	42 1/2 [1080]	19 1/2 [495]	480 [227]	575 [271]	640 [302]	775 [366]	92/106 [42/48]

*Maximum dehumidification airflow.

Airflow Directions

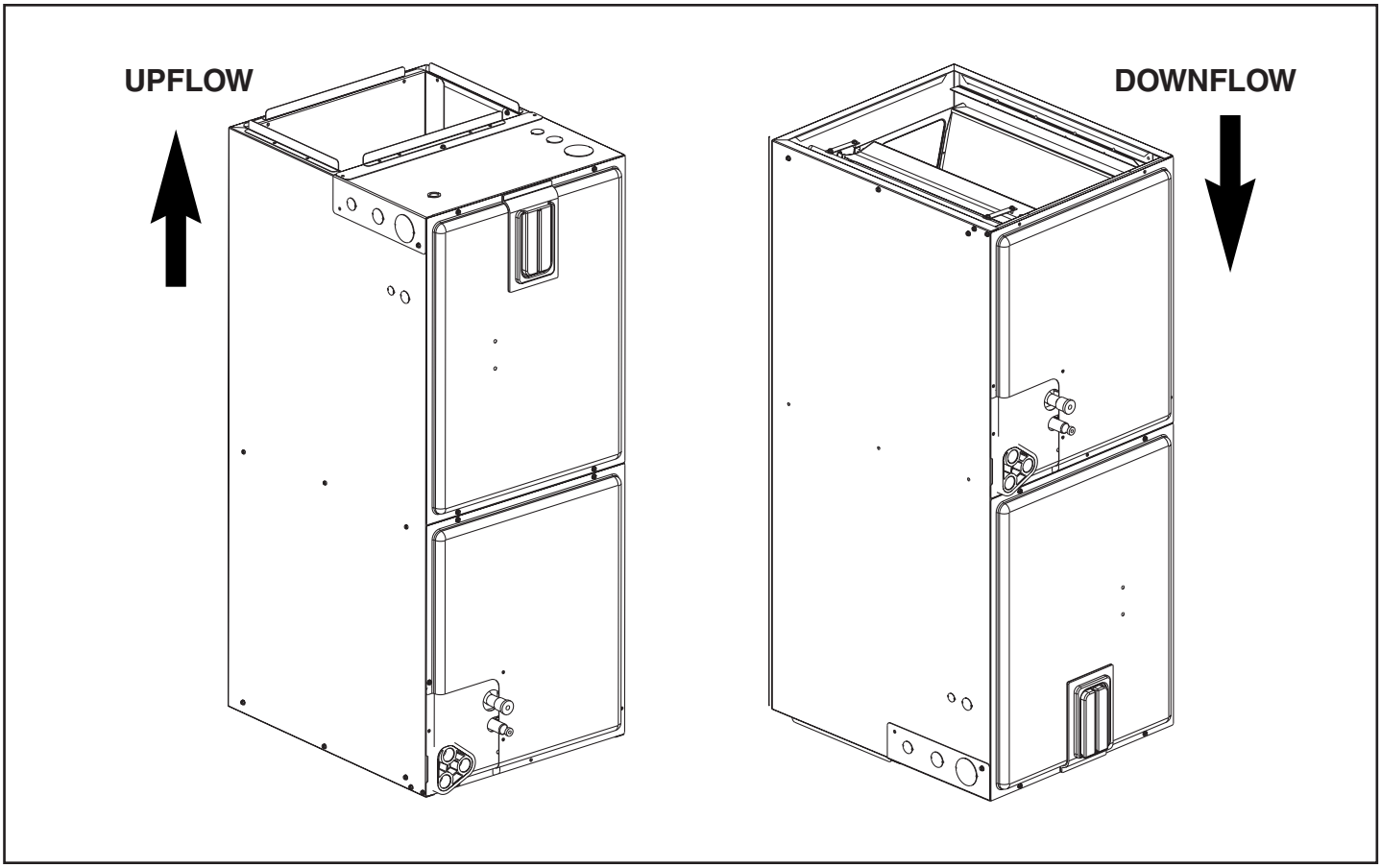

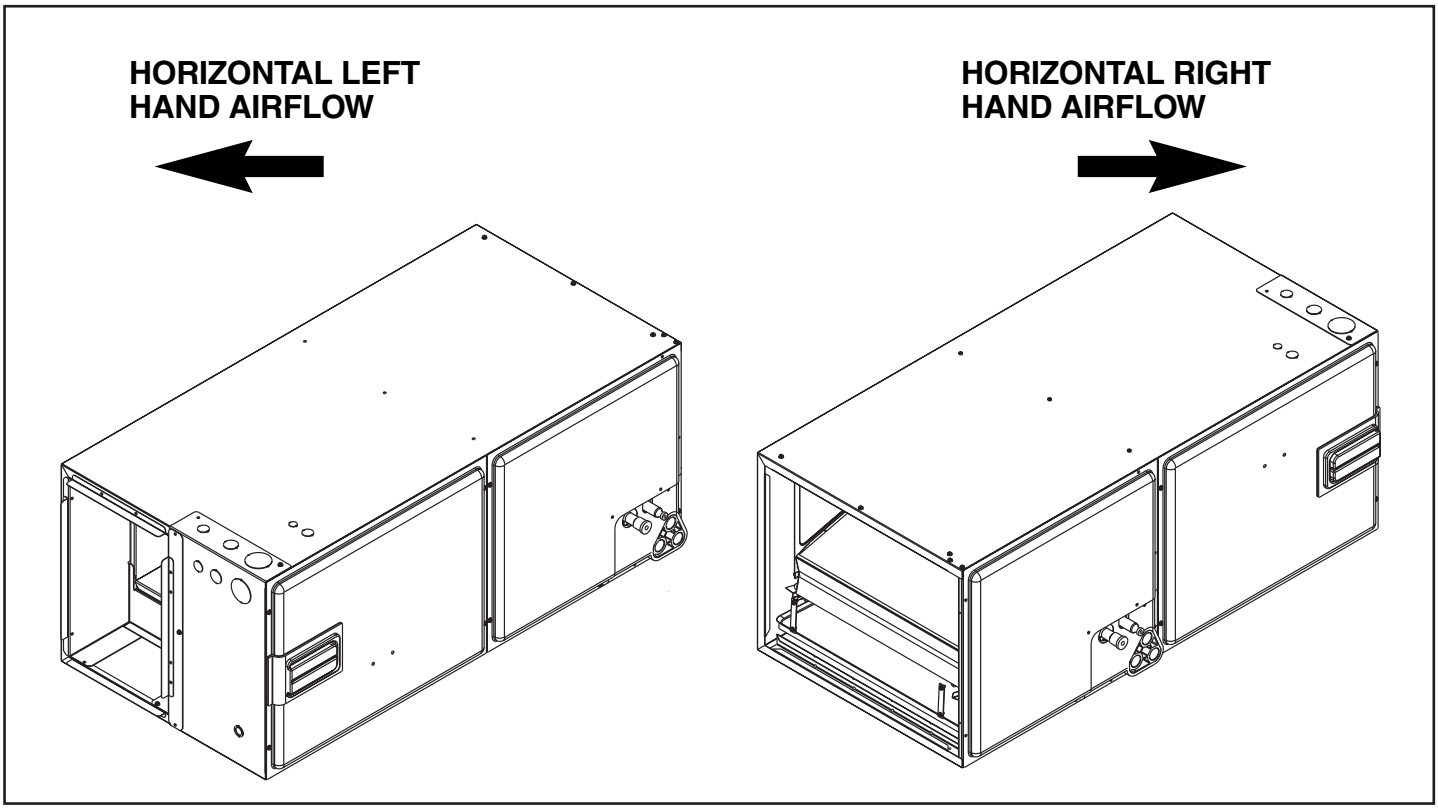

Airflow Performance

Airflow performance data is based on cooling performance with a coil and no filter in place. Select performance table for appropriate unit size, voltage and number of electric heaters to be used. Make sure external static applied to unit allows operation within the minimum and maximum limits shown in table below for both cooling and electric heat operation. For optimum blower performance, operate the unit in the .1 [2.54 mm] to 1.00 inches [25.4 mm] W.C. external static range. Units with coils should be applied with a minimum of .1 inch [2.54 mm] W.C., external static.

Airflow Performance and Electrical Data

Nominal Cooling Capacity	Cabinet Size	Blower		Nominal Airflow CFM		ECM CFM [L/s] Air Delivery/RPM/Watts-230 Volts									
		Size Motor HP	Thermostat Input			External Static Pressure – Inches W.C. [kPa]									
						0.10	0.20	0.30	0.40	0.50	0.60	0.70	0.80	0.90	1.00
2 Ton	21	10 x 8 1/3	Y1	575	CFM	570 [269]	571 [269]	572 [270]	573 [270]	574 [271]	575 [271]	576 [272]	577 [272]	578 [273]	579 [273]
					RPM	459	525	591	657	724	790	856	722	988	1054
					Watts	37	54	71	88	105	123	140	157	174	191
			Y2	775	CFM	772 [364]	778 [367]	783 [370]	788 [372]	794 [375]	799 [377]	805 [380]	810 [382]	816 [385]	821 [387]
					RPM	486	550	615	679	744	809	873	938	1003	1061
					Watts	56	80	104	128	151	175	199	228	247	271

IMPORTANT: Observe airflow operating limits. Do not operate above 1.0 in. W.C. system external static.

Blower Motor Electrical Data

Nominal Cooling Capacity Tons	HP [W]	Voltage	Phase	Hertz	RPM	Circuit Amps.	Minimum Circuit Ampacity	Maximum Circuit Protector
2	1/3 [249]	208/230	1	60	300-1100	1.7	4.0	15

Electric Heat Electrical Data

Installation of the UL Listed original equipment manufacturer provided heater kits listed in the table below is recommended for all auxiliary heating requirements.

Air Handler Cabinet Size/ Cooling Capacity	Manufacturer Model Number	Type Supply Circuit	Voltage	PH/HZ	Heater kW	Heater AMPS	Motor Ampacity	Maximum Circuit Protection	Minimum Circuit Ampacity
21" / 2 Ton	RXBH-24A05J	Single	208/240	1/60	3.6/4.8	17.3/20.0	1.7	25/30	24/28
	RXBH-24A07J	Single	208/240	1/60	5.4/7.2	26.0/30.0	1.7	35/40	35/40
	RXBH-24A10J	Single	208/240	1/60	7.2/9.6	34.6/40.0	1.7	50/60	46/53

- **Supply circuit protective devices may be fuses or "HACR" type circuit breakers.**
- **Largest motor load is included in single circuit and multiple circuit 1.**
- **If non-standard fuse size is specified, use next size larger standard fuse size.**
- **J Voltage (230V) single phase air handler is designed to be used with single or three phase 230 volt electric heaters. In the case of connecting 3-phase power to the air handler terminal block without the heater, bring only two leads to the terminal block cap, insulate and fully secure the third lead.**

[ ] Designates Metric Conversions

Electrical Wiring

Power Wiring

- Field wiring must comply with the National Electrical Code (C.E.C. in Canada) and any applicable local ordinance.
- Supply wiring must be 75°C minimum copper conductors only.
- See electrical data for product Ampacity rating and Circuit Protector requirement.

Grounding

- This product must be sufficiently grounded in accordance with National Electrical Code (C.E.C. in Canada) and any applicable local ordinance.
- A grounding lug is provided.

Accessories-Kits—Parts

- **Combustible Floor Base RXHB-**

Model Cabinet Size	Combustible Floor Base Model Number
21	RXHB-21

- **Jumper Bar Kit 3 Ckt. to 1 Ckt. RXBJ-A31** is used to convert single phase multiple three circuit units to a single supply circuit. Kit includes cover and screw for line side terminals.
- **Jumper Bar Kit 2 Ckt. to 1 Ckt. RXBJ-A21** is used to convert single phase multiple two circuit units to a single supply circuit. Kit includes cover and screw for line side terminals.
- **Note:** No jumper bar kit is available to convert three phase multiple two circuit units to a single supply circuit.
- **External Filter Base RXHF-**

Model Cabinet Size	Filter Size In. [mm]	Part Number	A	B
21	20 x 20 [508 x 508]	RXHF-21	19.20	21.00

Nominal Cooling Capacity-Tons	Auxiliary Horizontal Overflow Pan Accessory Model Number
2 - 3	RXBM-AC48

- **Auxiliary Electric Heater Kits RXBH-**
  Heater Kits include circuit breakers which meet UL and cUL requirements for service disconnect. See the Electric Heat Electrical Data in this specification sheet for specific Heater Kit Model numbers.

[ ] Designates Metric Conversions

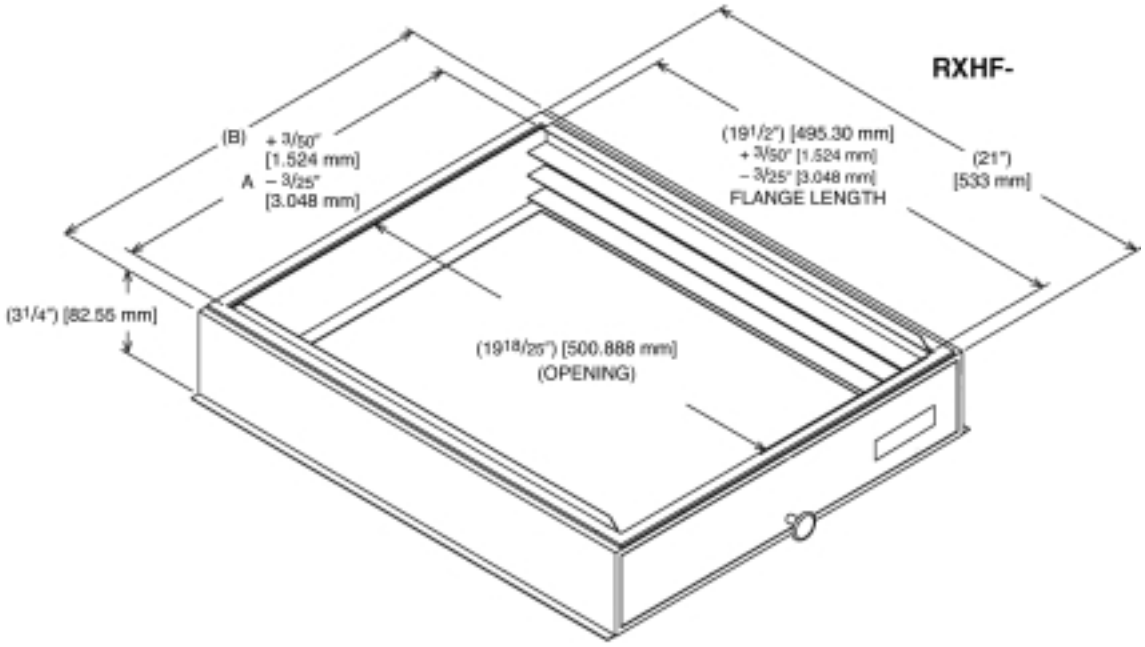

- **External Filter Base RXHF-B**

Model Cabinet Size	Filter Size In. [mm]	Part Number*	A	B
21	20 x 20 [508 x 508]	RXHF-B21	20.40	20.77

*Accommodates 1" filter

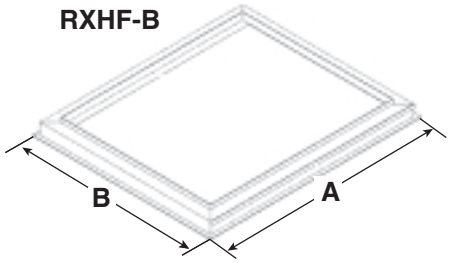

Before proceeding with installation, refer to installation instructions packaged with each model, as well as complying with all Federal, State, Provincial, and Local codes, regulations, and practices.

RUUD
AIR CONDITIONING
DIVISION

5600 Old Greenwood Road, Fort Smith, Arkansas 72908

"In keeping with its policy of continuous progress and product improvement, Ruud reserves the right to make changes without notice."

PRINTED IN U.S.A. 5-07 DC FORM NO. H22-528