SUBMITTAL COVER SHEET

PROJECT NAME _____

LOCATION _____

ARCHITECT _____

ENGINEER _____

CONTRACTOR _____

SUBMITTED BY _____ DATE _____

UNIT SUMMARY

Quantity						
Unit Designation						
Model No.						
Total Cooling						
Sensible Cooling						
Air Ent. Evaporator						
Air Lvg. Evaporator						
Heating Input						
Heating Output						
CFM/ESP						
EER/SEER						
Electrical						
Minimum Ampacity						
Min.-Max. Breaker						
Net Unit Weight						
Accessory						
Catalog Form Number						

ACCESSORIES:

NOTES:

SUBMITTAL SHEET FOR RLKL 6 TON [21.1 kW] PACKAGE AIR CONDITIONERS

R-410A

JOB NAME _____

CONTRACTOR _____

ENGINEER _____

LOCATION _____

ORDER NO. _____

SUBMITTED FOR ☐ APPROVAL ☐ RECORD

SUBMITTED BY _____

DATE _____

UNIT DESIGNATION _____

MODEL NO. _____

STANDARD FEATURES INCLUDE:

- R-410A HFC refrigerant.
- Complete factory charged, wired and run tested.
- Scroll compressors with internal line break overload and high-pressure protection.
- Single stage compressor on all models.
- Convertible airflow.
- TXV refrigerant metering system on each circuit.
- High Pressure and Low Pressure/Loss of charge protection standard on all models.
- Solid Core liquid line filter drier on each circuit.
- Single slab, single pass designed evaporator coil facilitates easy cleaning for maintained high efficiencies.
- Cooling operation up to 125 degree F ambient.
- Easily removable filter, blower, electric heat, and control access panels permits prompt service.
- Powder Paint Finish meets ASTMB117 steel coated on each side for maximum protection. G90 galvanized.
- One piece top cover and one piece base pan with drawn supply and return opening for superior water management.
- Externally mounted refrigerant gauge ports for easy service diagnostics.
- Factory or field-installed electric heat kits available up to 24 kW.
- Easy to install plug-in; slip in, 100% fully modulating economizer.
- Forkable base rails for easy handling and lifting.
- Single point electrical connections.
- Direct drive or high performance belt drive motor with variable pitch pulleys and quick adjust belt system.
- Permanently lubricated evaporator, and condenser motors.
- Condenser motors are internally protected, totally enclosed with shaft down design.
- 1 inch filter standard with slide out design.
- Colored and labeled wiring.
- Copper tube/Aluminum Fin coils.
- Molded compressor plug.

UNIT DATA

COOLING PERFORMANCE

TOTAL CAPACITY* ..... _____ MBH
SENSIBLE CAPACITY* ..... _____ MBH
EFFICIENCY (at AHRI)..... _____ EER
AMBIENT DB TEMP..... _____ °F
ENTERING DB TEMP ..... _____ °F
ENTERING WB TEMP ..... _____ °F
LEAVING DB TEMP ..... _____ °F
LEAVING WB TEMP ..... _____ °F
TOTAL POWER INPUT..... _____ kW
ELEVATION ..... _____ FT
SOUND POWER ..... _____ DBELS

HEATING PERFORMANCE

ELECTRIC HEAT CAPACITY ..... _____ kW

SUPPLY AIR BLOWER PERFORMANCE

SUPPLY AIR..... _____ CFM [L/s]
OUTSIDE AIR..... _____ CFM [L/s]
EXTERNAL STATIC PRESSURE ..... _____ IWG
DUCT CONNECTION LOCATION ..... _____
BLOWER SPEED ..... _____ RPM
MOTOR RATING ..... _____ HP [W]
BRAKE HORSEPOWER..... _____ BHP
POWER INPUT REQUIREMENT..... _____ kW

ELECTRICAL DATA

POWER SUPPLY..... _____ Hz
MINIMUM CIRCUIT AMPACITY..... _____ AMPS
MAXIMUM OVERCURRENT DEVICE
FUSE SIZE ..... _____ AMPS
HACR CIRCUIT BREAKER ..... _____ AMPS

DIMENSIONS & WEIGHT

HEIGHT____ IN WIDTH____ IN DEPTH ____ IN
TOTAL WEIGHT ..... _____ LBS [kg]
(including factory options)

CLEARANCES

FRONT 48" [1219 mm]	BACK 12" [305 mm]
BOTTOM 0"	TOP 60" [1524 mm]
LEFT SIDE	36" [914 mm]
RIGHT SIDE (condenser end)	18" [457 mm]

ROOFCURB FOR RLKL 6 TON [21.1 kW] MODELS

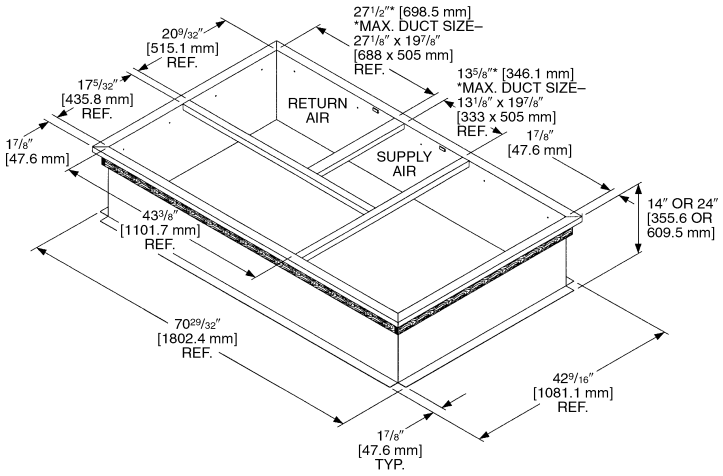

[ ] Designates Metric Conversions

UNIT DIMENSIONS FOR RLKL 6 TON [21.1 kW] MODELS

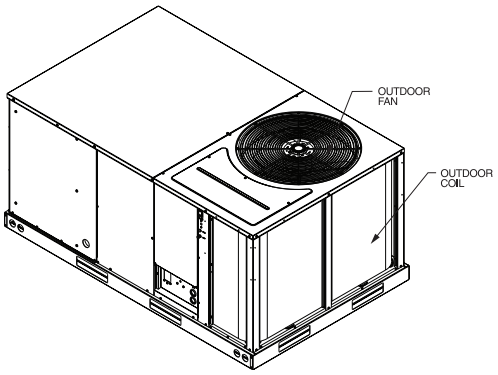

BOTTOM VIEW

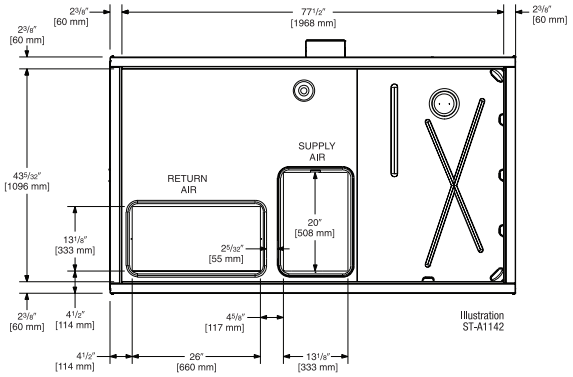

BACK VIEW

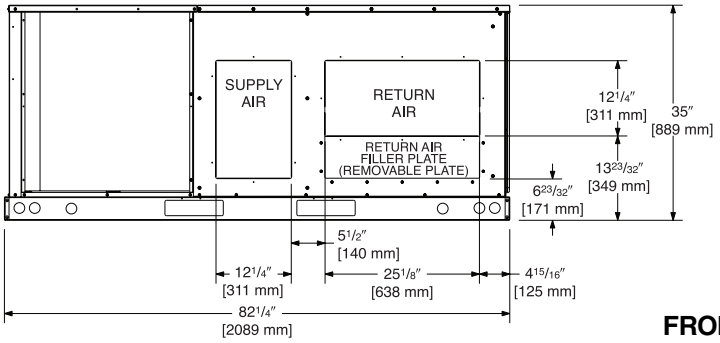

SIDE VIEW

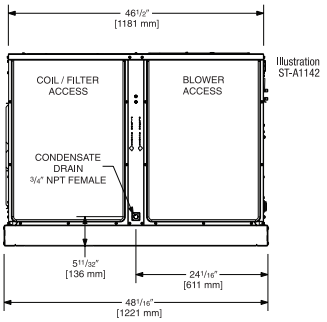

FRONT VIEW

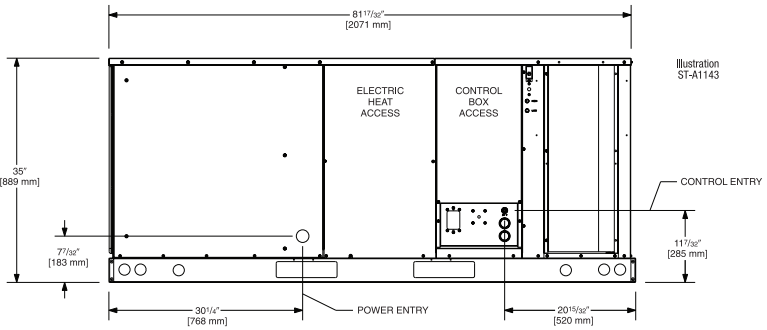

[ ] Designates Metric Conversions

ACCESSORIES

Factory Installed

- Oversized Blower motor ☐
- Outdoor Coil Guard ☐
- Non-Powered Convenience Outlet ☐
- Low Ambient & Freezestat Control ☐
- Single Enthalpy Economizer w/Barometric Relief ☐

Field Installed

- Thermostats ☐
- Outdoor Coil Guard ☐
- Non-Powered Convenience Outlet ☐
- Low Ambient Control ☐
- Freezestat Control ☐
- 14" Full Perimeter Roofcurb ☐
- 24" Full Perimeter Roofcurb ☐
- Roofcurb Adapters ☐
- Concentric Diffuser ☐
- Rectangular to Round 20" Adapter ☐
- Manual Outside Air Intake Damper ☐
- Motorized Outside Air Intake Damper ☐
- Single Enthalpy Economizer w/Barometric Relief ☐
- Dual Enthalpy Adapter ☐
- Power Exhaust ☐
- CO_2 Sensor (wall mount with LCD) ☐

Before proceeding with installation, refer to installation instructions packaged with each model, as well as complying with all Federal, State, Provincial, and Local codes, regulations, and practices.

Rheem Sales Company, Inc.
P.O. Box 17010, Fort Smith, AR 72917

"In keeping with its policy of continuous progress and product improvement, Rheem reserves the right to make changes without notice."

PRINTED IN U.S.A. 12-10 DC

FORM NO. X33-1301 REV. 2
Supersedes Form No. X33-1301 Rev. 1