SUBMITTAL COVER SHEET

PROJECT NAME _____

LOCATION _____

ARCHITECT _____

ENGINEER _____

CONTRACTOR _____

SUBMITTED BY _____ DATE _____

UNIT SUMMARY

Quantity						
Unit Designation						
Model No.						
Total Cooling						
Sensible Cooling						
Air Ent. Evaporator						
Air Lvg. Evaporator						
Heating Input						
Heating Output						
CFM/ESP						
EER/SEER						
Electrical						
Minimum Ampacity						
Min.-Max. Breaker						
Net Unit Weight						
Accessory						
Catalog Form Number						

ACCESSORIES:

NOTES:

SUBMITTAL SHEET FOR PACKAGE AIR CONDITIONERS RLNL- 13 SEER SERIES, RLPL- 14 SEER SERIES NOMINAL SIZES 3-5 TONS [10.6-17.6 kW] FEATURING EARTH-FRIENDLY R-410A REFRIGERANT

featuring R-410A earth friendly refrigerant

JOB NAME _____

CONTRACTOR _____

ENGINEER _____

LOCATION _____

ORDER NO. _____

SUBMITTED FOR ☐ APPROVAL ☐ RECORD

SUBMITTED BY _____

DATE _____

UNIT DESIGNATION _____

MODEL NO. _____

UNIT DIMENSIONS FOR PACKAGE AIR CONDITIONERS 3 TO 5 TON [10.6 TO 17.6 kW] MODELS

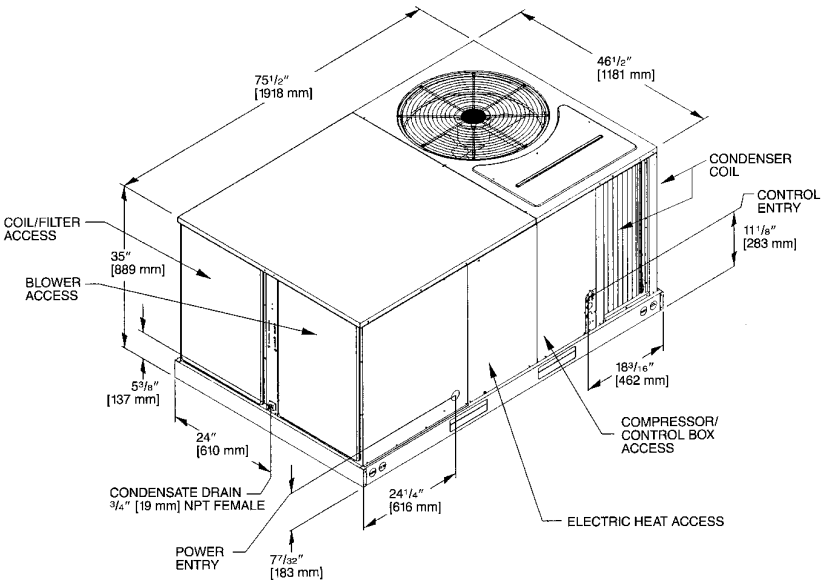

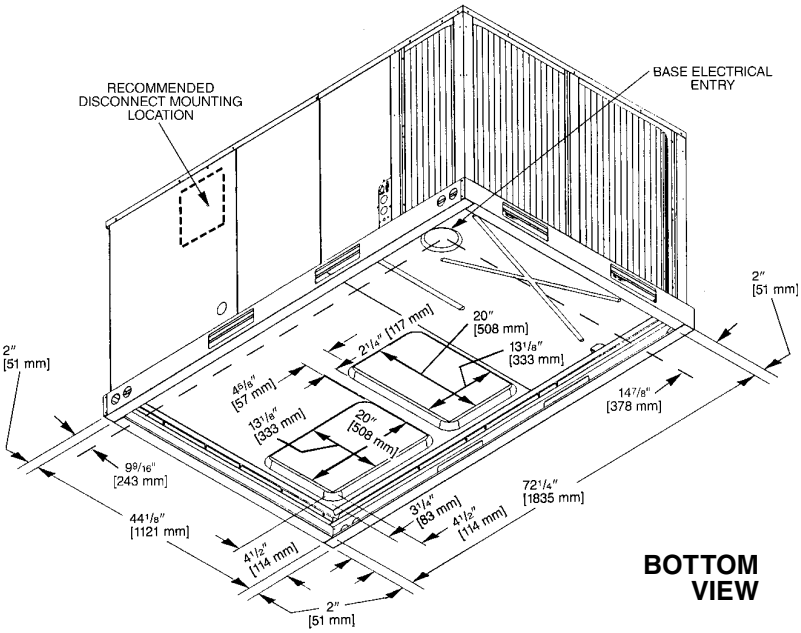

BOTTOM VIEW

UNIT DATA

COOLING PERFORMANCE

TOTAL CAPACITY* ..... _____ MBH

SENSIBLE CAPACITY* ..... _____ MBH

OUTDOOR DESIGN TEMP. _____ °F [°C] DB/WB

TOTAL SUPPLY AIR..... _____ CFM [L/s]

TEMP. OF AIR ENTERING EVAPORATOR COIL ..... _____ °F [°C] DB/WB

POWER INPUT REQUIREMENT ..... _____ kW

SEER/EER RATING ..... _____

(*uses blower motor heat)

ELECTRIC HEAT PERFORMANCE

ELECTRIC HEAT CAPACITY ..... _____ kW

SUPPLY AIR BLOWER PERFORMANCE

TOTAL SUPPLY AIR..... _____ CFM [L/s]

TOTAL RESISTANCE EXTERNAL TO UNIT ..... _____ IWG

BLOWER SPEED ..... _____ RPM

POWER OUTPUT REQUIREMENT .. _____ BHP

MOTOR RATING ..... _____ HP [W]

POWER INPUT REQUIREMENT ..... _____ kW

ELECTRICAL DATA

POWER SUPPLY 208-230V/3PH/60Hz

TOTAL UNIT AMPACITY ..... _____ AMPS

MINIMUM WIRE SIZE..... _____ AWG

MAXIMUM OVERCURRENT DEVICE FUSES HACR BREAKER ..... _____ AMPS

TOTAL UNIT WEIGHT

TOTAL OPERATING WEIGHT .... _____ LBS [kg]

(including field-installed accessories)

CLEARANCES

FRONT	48" [1219 mm]
CONDENSER COIL	18" [457 mm]
DUCT SIDE	12" [305 mm]
EVAPORATOR END	36" [914 mm]
ABOVE UNIT	60" [1524 mm]

[ ] Designates Metric Conversions

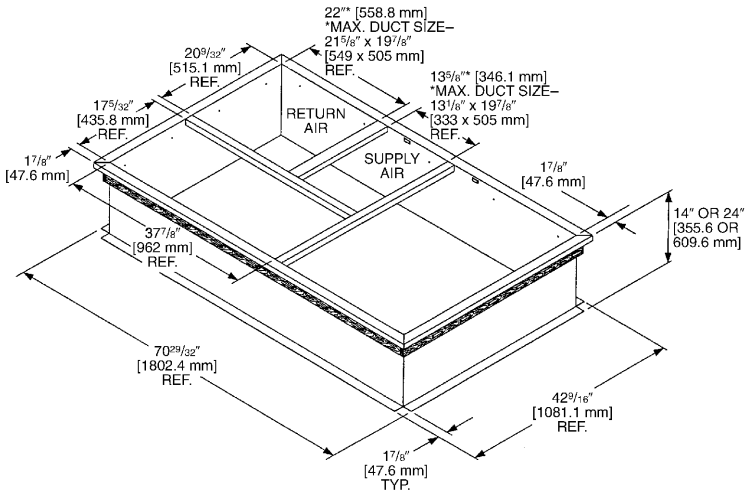

ROOFCURB FOR
RLNL 3-5 TON [10.6-17.6 kW],
RLPL 3-5 TON [10.6-17.6 kW] MODELS

[ ] Designates Metric Conversions

ACCESSORIES

Economizers
- Single Enthalpy ..... ☐
- Dual Enthalpy ..... ☐
- CO_2 Sensor ..... ☐

Fresh Air Dampers
- Manual ..... ☐
- Motorized ..... ☐

- Condenser Coil Guards ..... ☐
- L.P. Conversion Kits ..... ☐
- Roofcurbs ..... ☐
- Low Ambient Control ..... ☐
- Electric Heater Kits ..... ☐
- Concentric Diffuser ..... ☐
- Rectangular to Round Transition ..... ☐
- Roofcurb Adaptors ..... ☐
- High Pressure Control ..... ☐
- Low Pressure Control ..... ☐
- Thermostat ..... ☐

Before proceeding with installation, refer to installation instructions packaged with each model, as well as complying with all Federal, State, Provincial, and Local codes, regulations, and practices.

RHEEM
MANUFACTURING
COMPANY
5600 Old Greenwood Road, Fort Smith, Arkansas 72908

"In keeping with its policy of continuous progress and product improvement, Rheem reserves the right to make changes without notice."

PRINTED IN U.S.A. 9-06 DC FORM NO. X33-1244