The new degree of comfort.™

Rheem *Prestige™* Series Communicating Two-Stage Variable Speed Upflow/Horizontal Gas Furnace

R802V- Upflow/Horizontal Series

80% A.F.U.E.†
Input Rates 50-125 kBTU

†A.F.U.E. (Annual Fuel Utilization Efficiency) calculated in accordance with Department of Energy test procedures.

- 80% residential Gas Furnace CSA certified
- Two stages of operation to save energy and maintain optimal comfort level.
- Variable speed blower motor technology provides ultimate humidity control quieter sound levels and year round energy savings
- EcoNet enabled HVAC product
- 3 way multi poise design UF / HZ
- PlusOne™ Diagnostics — 7 Segment LED all units
- PlusOne™ Ignition System – DSI for reliability and longevity
- Heat exchanger is removable for improved serviceability. Aluminized steel construction provides maximum corrosion resistance and thermal fatigue reliability.
- Solid doors provide quiet operation
- Solid bottom
- Insulated blower compartment
- Low profile 34" cabinet ideal for space constrained installations
- Blower shelf design – serviceable in all furnace orientations
- Hemmed edges on cabinets and doors
- 1/4 turn door knobs for tool less access
- Integrated Control board features dip switches for easy system set up
- QR code for quick access to product information from your smart phone or tablet
- Compatible with single or two stage thermostats. For optimal performance a two stage thermostat is recommended.

TABLE OF CONTENTS

Standard & Optional Equipment 3
Model Features/Physical Data & Specifications 4
Model Number Identification 5
Dimensional Data 6-7
Blower Performance Data 8
Accessories 9
Limited Warranty 10

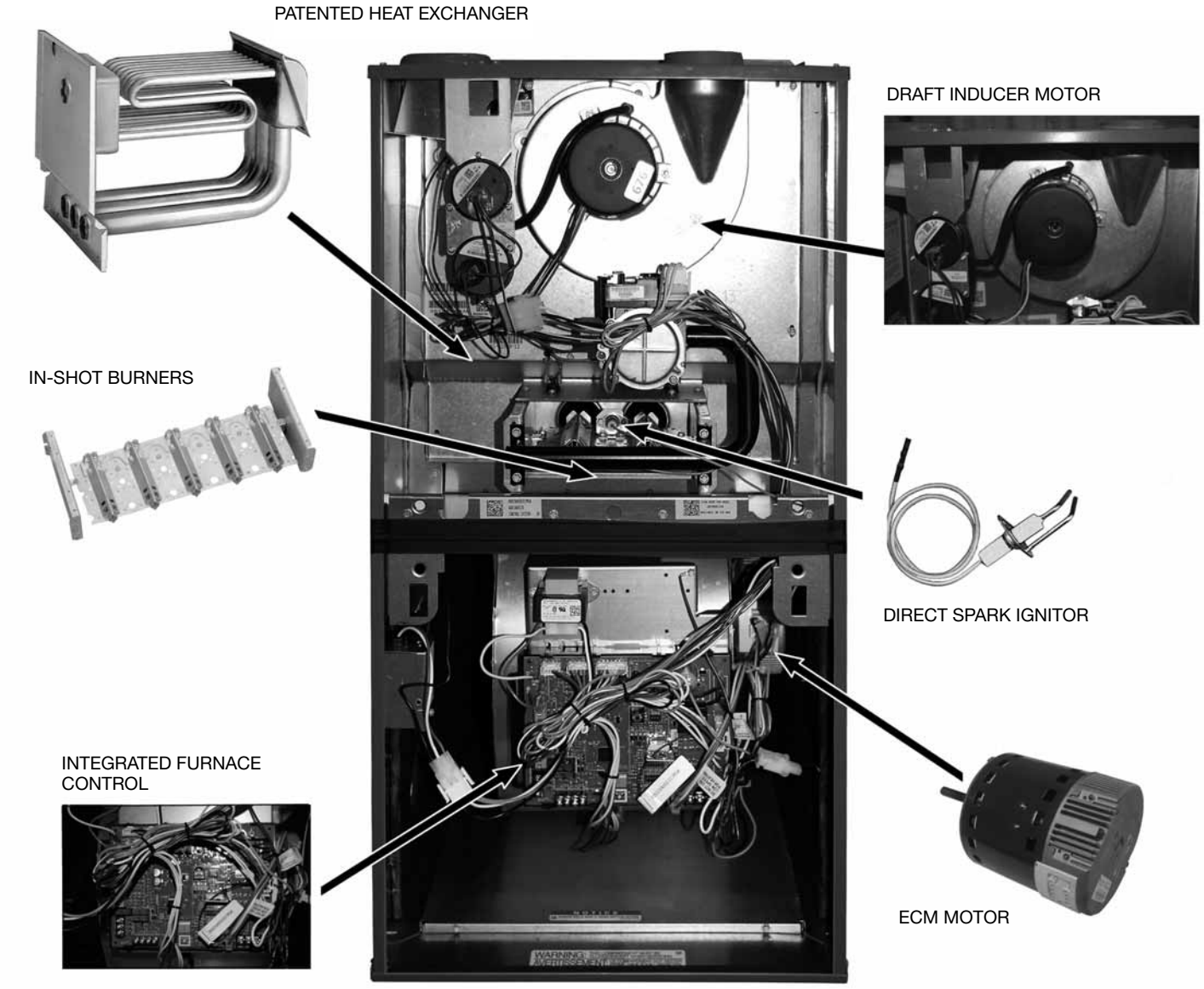

STANDARD EQUIPMENT

Completely assembled and wired; 2 speed induced draft blower; high and low pressure switches; 2 stage redundant main gas control; blower compartment door safety switch; solid state time on/time off blower control; limit control; transformer; ECM blower motor. Furnaces are equipped with cooling/heating relay and transformer (50VA) ready for air conditioning applications. (Please note: a thermostat is not included as standard equipment.) Flame sensor diagnostics; fused-protection (secondary), **3rd speed option for continuous fan.**

OPTIONAL EQUIPMENT

Side and bottom filter frame assembly. 4" Flue Adapter

NOTE: Furnace is not listed for use with fuels other than natural or L.P. (propane) gas.

The complete terms of limited and other warranties are available at our sales office, or through local installer.

All models can be converted by a qualified Rheem distributor or local service dealer to use L.P. (propane) gas without changing burners. Factory approved kits must be used to convert from natural to L.P. (propane) gas and may be ordered as optional accessories from a Rheem parts distributor.

For L.P. (propane) operation, refer to Conversion Kit Index Form.

NOTE: For natural and L.P. (propane) gas models, direct spark ignition is 100% safety lockout type.

WARNING

THIS FURNACE IS NOT APPROVED
OR RECOMMENDED
FOR USE IN MOBILE HOMES

Model Features

- 80% residential Gas Furnace CSA certified
- Two stages of operation to save energy and maintain optimal comfort level.
- Variable speed blower motor technology provides ultimate humidity control quieter sound levels and year round energy savings
- EcoNet enabled HVAC product
- 3 way multi poise design UF / HZ
- PlusOne™ Diagnostics — 7 Segment LED all units
- PlusOne™ Ignition System – DSI for reliability and longevity
- Heat exchanger is removable for improved serviceability. Aluminized steel construction provides maximum corrosion resistance and thermal fatigue reliability.
- Solid doors provide quiet operation
- Solid bottom
- Insulated blower compartment
- Low profile 34" cabinet ideal for space constrained installations
- Blower shelf design serviceable in all furnace orientations
- Hemmed edges on cabinets and doors
- 1/4 turn door knobs for tool less access
- Integrated Controls board features dip switches for easy system set up
- QR code for quick access to product information from your smart phone or tablet
- Compatible with single or two stage thermostats. For optimal performance a two stage thermostat is recommended.

Physical Data and Specifications

MODEL NUMBERS R802V SERIES	R802VA050317M*A	R802VA075317M*A	R802VA075421M*A	R802VA100521M*A	R802VA125524M*A
High Input-BTU/Hr [kW] ②	50,000 [15]	75,000 [22]	75,000 [22]	100,000 [29]	125,000 [37]
Heating Capacity BTU/Hr [kW] ①	41,000 [12]	61,000 [18]	61,000 [18]	81,000 [24]	101,000 [30]
Low Input BTU/Hr [kW] ②	35,000 [10]	52,500 [15]	52,500 [15]	70,000 [20]	87,500 [25]
Heating Capacity BTU/Hr [kW] ①	28,000 [8]	42,000 [12]	42,000 [12]	56,000 [16]	70,000 [20]
Heat Ext. Static Pressure [kPa]	.18 [.045]	.20 [.050]	.20 [.050]	.28 [.070]	.28 [.070]
Blower (D x W) [mm]	11 x 7 [279 x 178]	11 x 7 [279 x 178]	11 x 7 [279 x 178]	11 x 10 [279 x 254]	11 x 10 [279 x 254]
Motor H.P. Type [W]	1/2 ECM [373]	1/2 ECM [373]	3/4 ECM [560]	3/4 ECM [560]	3/4 ECM [560]
Min. Circuit Ampacity	10	9	13	12	12
Min. Overload Protection Device	15	15	15	15	15
Max. Overload Protection Device	15	15	20	20	15
Cooling CFM @ Rating Point [L/s]	1200 [566]	1200 [566]	1600 [755]	2000 [944]	2000 [944]
Max. E.S.P. (In. W.C.) [kPa]	1.0 [.249]	1.0 [.249]	1.0 [.249]	1.0 [.249]	1.0 [.249]
Temperature Rise Range °F [°C]–High Input	25-55 [13.9-30.6]	25-55 [13.9-30.6]	25-55 [13.9-30.6]	35-65 [19.4-36.1]	35-65 [19.4-36.1]
Temperature Rise Range °F [°C]–Low Input	20-50 [12.8-29.4]	20-50 [12.8-29.4]	20-50 [12.8-29.4]	30-60 [18.3-35]	30-60 [18.3-35]
Max. Outlet Air Temp. °F [°C]	155 [68.3]	155 [68.3]	165 [73.8]	180 [82.2]	180 [82.2]
Approx. Shipping Weight (Lbs.) [kg]	125 [57]	125 [57]	140 [64]	140 [64]	150 [68]
AFUE ①	80.0%	80.0%	80.0%	80.0%	80.0%

NOTES: All models are 115V, 60HZ, 1 Ph. Gas connection size for all models is 1/2" [12 mm] N.P.T.
① In accordance with D.O.E. test procedures.
② See Conversion Kit Index Form for high altitude derate.
* S = Standard, X = Low Nox

[ ] Designates Metric Conversions

Model Number Identification

R	80	2	V	A	075	4	17	M	S	A
Rheem	80 = 80% AFUE	2 = Two Stage	V = Variable Speed ECM	Design Series A = 1st Design	Input BTU/HR [kW] 050 = 50,000 [15] 075 = 75,000 [22] 100 = 100,000 [29] 125 = 125,000 [37]	3 = Up to 3 Ton 4 = 2 1/2 to 4 Ton 5 = 3 1/2 to 5 Ton	Cabinet Width 17 = 17.5" 21 = 21" 24 = 24.5"	M = Multi	X = Low NO_x S = Standard	Revision-Marketing (A – First Time Release)

[ ] Designates Metric Conversions

Upflow Application

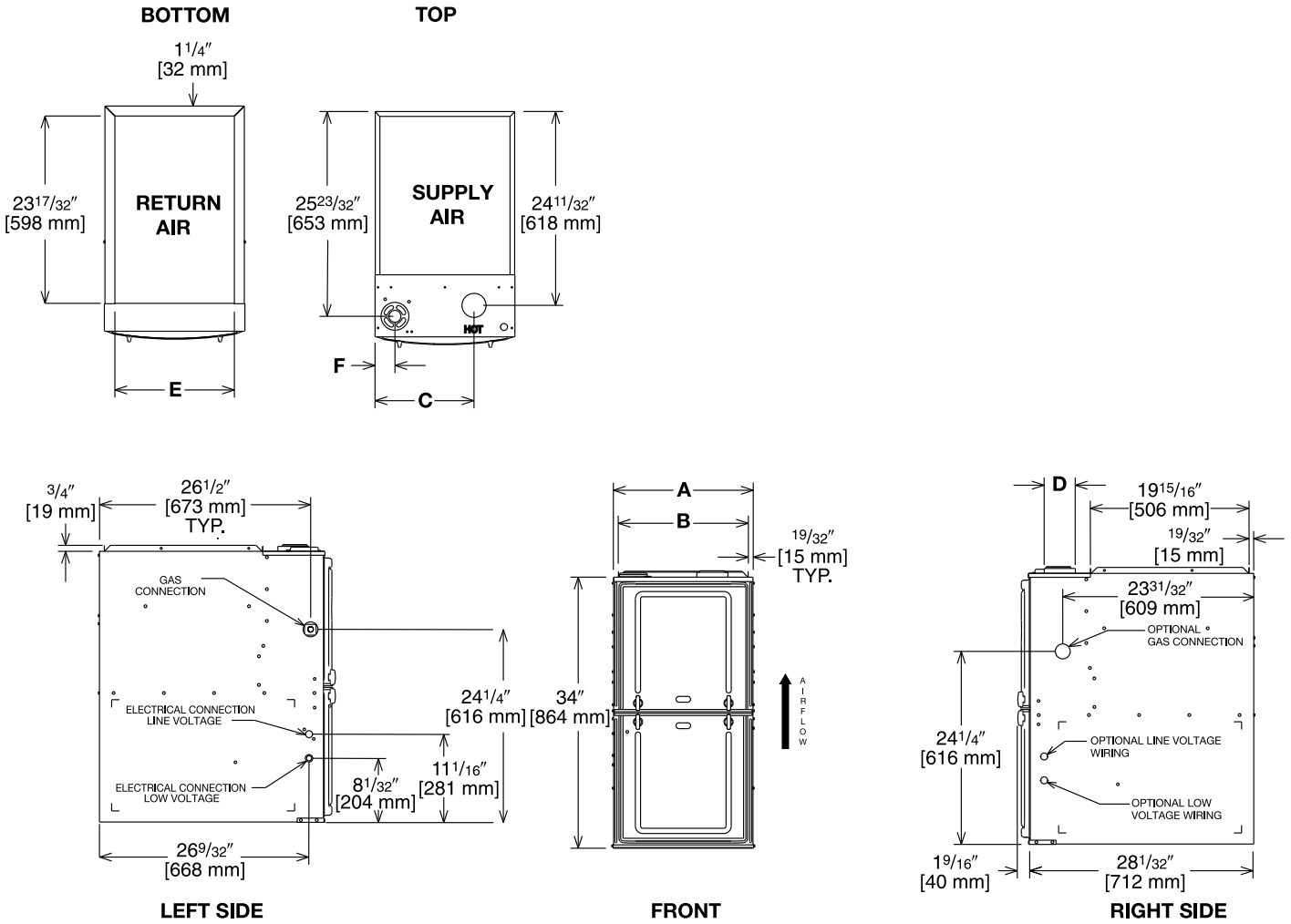

Illustration
ST-A1220-04-00
FIGURE 1

Dimensional Data: Upflow Model

MODEL R802V-	A	B	C	D	E	F	MINIMUM CLEARANCE (IN.) [mm]						SHIP WGTS. (LBS.) [kg]
							LEFT SIDE	RIGHT SIDE	BACK	TOP	FRONT	VENT	
050, 075317	17 1/2 [445]	16 11/32 [415]	12 3/8 [314]	①	15 [381]	2 1/2 [64]	0	3 [76] ②	0	1 [25]	3 [76]	6 [152] ③	125 [57]
075421, 100	21 [533]	19 27/32 [504]	14 1/8 [359]	①	18 1/2 [470]	2 1/2 [64]	0	0	0	1 [25]	3 [76]	6 [152] ③	140 [64]
125	24 1/2 [622]	23 11/32 [593]	15 7/8 [403]	①	22 [559]	2 1/2 [64]	0	0	0	1 [25]	3 [76]	6 [152] ③	150 [68]

NOTES: ① May require a 3" [76 mm] to 4" [102 mm] or 3" [76 mm] to 5" [127 mm] adapter.
② May be 0" [0 mm] with type B vent.
③ May be 1" [25 mm] with type B vent.
Furnaces must be vented in accordance with the National Fuel Gas Code, ANSI Z223.1 in accordance with local codes.

[ ] Designates Metric Conversions

Horizontal Application

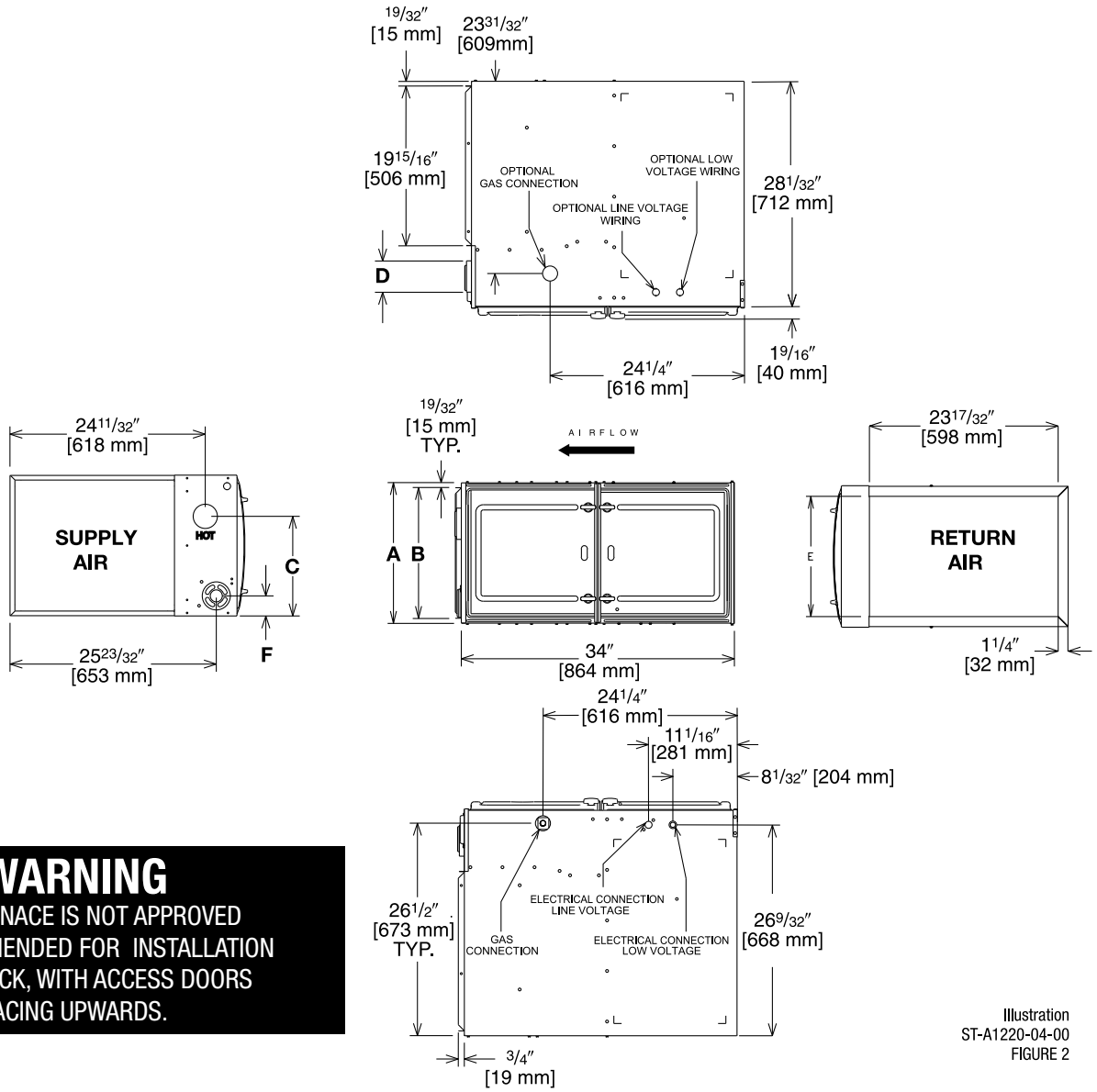

WARNING
THIS FURNACE IS NOT APPROVED OR RECOMMENDED FOR INSTALLATION ON ITS BACK, WITH ACCESS DOORS FACING UPWARDS.

Illustration
ST-A1220-04-00
FIGURE 2

Dimensional Data: Horizontal Model

MODEL R802V-	A	B	C	D	E	F	MINIMUM CLEARANCE (IN.) [mm]						SHIP WGTS. (LBS.) [kg]
							SUPPLY AIR SIDE	RETURN AIR SIDE	BACK	TOP	FRONT	VENT	
050, 075317	17 1/2 [445]	16 11/32 [415]	12 3/8 [314]	①	15 [381]	2 1/2 [64]	3 [76] ②	0	0	1 [25]	3 [76]	6 [152] ③	125 [57]
075421, 100	21 [533]	19 27/32 [504]	14 1/8 [359]	①	18 1/2 [470]	2 1/2 [64]	0	0	0	1 [25]	3 [76]	6 [152] ③	140 [64]
125	24 1/2 [622]	23 11/32 [593]	15 7/8 [403]	①	22 [559]	2 1/2 [64]	0	0	0	1 [25]	3 [76]	6 [152] ③	150 [68]

NOTES: ① May require a 3" [76 mm] to 4" [102 mm] or 3" [76 mm] to 5" [127 mm] adapter.
② May be 0" [0 mm] with type B vent.
③ May be 1" [25 mm] with type B vent.
Furnaces must be vented in accordance with the National Fuel Gas Code, ANSI Z223.1 in accordance with local codes.

[ ] Designates Metric Conversions

Blower Performance Data

MODEL NUMBER				R802VA050317MSA	R802VA075317MSA	R802VA075421MSA	R802VA100521MSA	R802VA125524MSA
TARGET GAS HEATING AIRFLOW	HIGH HEATING CFM	SW15 = OFF	SW16 = OFF	890	1425	1345	1400	1985
		SW15 = ON	SW16 = OFF	790	1200	1100	1250	1700
		SW15 = OFF	SW16 = ON	DO NOT USE				
		SW15 = ON	SW16 = ON	735	1075	960	1150	1530
	LOW HEATING CFM	SW13 = OFF	SW14 = OFF	835	1125	1045	1200	1500
		SW13 = ON	SW14 = OFF	590	950	865	1050	1275
		SW13 = OFF	SW14 = ON	DO NOT USE				
		SW13 = ON	SW14 = ON	510	825	665	950	1150
TARGET COOLING/ HEAT-PUMP AIRFLOW	HIGH COOLING CFM	SW4 = OFF	SW5 = OFF	1200	1200	1600	2000	2000
		SW4 = ON	SW5 = OFF	1000	1000	1400	1600	1600
		SW4 = OFF	SW5 = ON	800	800	1200	1400	1400
		SW4 = ON	SW5 = ON	600	600	1000	1200	1200
	LOW COOLING CFM	SW4 = OFF	SW5 = OFF	900	900	1200	1500	1500
		SW4 = ON	SW5 = OFF	750	750	1050	1200	1200
		SW4 = OFF	SW5 = ON	600	600	900	1050	1050
		SW4 = ON	SW5 = ON	450	450	750	900	900

Table represents blower performance data without filters.

[ ] Designates Metric Conversions

SIDE RETURN FILTER RACK: RXGF-CD

BOTTOM RETURN FILTER RACK FOR UPFLOW APPLICATION: RXGF-CB

FILTER RACK FILTER SIZES* INCHES [mm]		
MODEL R802V	RXGF-CB (UPFLOW/ HORIZONTAL)	RXGF-CD (UPFLOW) SIDE RETURN
050 & 075317	15 3/4 x 25 [400 x 635]	15 3/4 x 25 [400 x 635]
075421 & 100	19 1/4 x 25 [489 x 635]	15 3/4 x 25 [400 x 635]
125	22 3/4 x 25 [578 x 635]	15 3/4 x 25 [400 x 635]

INDOOR COIL CASINGS

MODEL NUMBER
RXBC-D17AI
RXBC-D21AI
RXBC-D21BI
RXBC-D24AI

4" FLUE ADAPTER: RXGW-C01

WARNING: IMPORTANT NOTICE

A SOLID METAL BASE PLATE (SEE TABLE) MUST BE IN PLACE WHEN THE FURNACE IS INSTALLED WITH SIDE AIR RETURN DUCTS. FAILURE TO INSTALL A BASE PLATE COULD CAUSE PRODUCTS OF COMBUSTION TO BE CIRCULATED INTO THE LIVING SPACE AND CREATE POTENTIALLY HAZARDOUS CONDITIONS.

FURNACE WIDTH IN. [mm]	SOLID BOTTOM KIT NO.	BASE PLATE NO.	BASE PLATE SIZE IN. [mm]
17 1/2 [445]	RXGB-D17	AE-61874-02	15 1/8 x 23 9/16 [384 x 598]
21 [533]	RXGB-D21	AE-61874-03	18 5/8 x 23 9/16 [473 x 598]
24 1/2 [622]	RXGB-D24	AE-61874-04	25 5/8 x 23 9/16 [651 x 598]

FOR HIGH ALTITUDES:

OPTION CODE FOR HIGH ALTITUDE: U.S.
None required for high altitudes.

HIGH ALTITUDE CONVERSION KITS: U.S.
None required for high altitudes.

80+ HIGH ALTITUDE INSTRUCTIONS
CAUTION: Always follow National Fuel Gas Code (NFGC) guidelines when converting for high altitudes.

High altitude option codes are not required for these models. However, the burner orifice size needs to be recalculated and verified at elevations above 2000 ft. See Installation Instructions for more information.

[ ] Designates Metric Conversions

ECONET CONTROL

RECOMMENDED COMMUNICATING FURNACE CONTROL

RETST600SYS

CONTRACTOR BENEFITS:
- Auto/Self Configuration
- Day-at-a-glance scheduling, with programmable fan
- Intuitive wiring connections
- Dual fuel ready
- Automatically optimizes airflow
- System status & mode information
- Complete diagnostic information on display

HOMEOWNER BENEFITS:
- Large, easy to read icons and characters
- Auto-mode control
- Smart recovery
- Continuous Fan Mode (5 speeds)
- Humidity Control
- Water heater, pool heater integration* (check model compatibility)

***ECONET CONTROL ACCESSORIES:**
Wall Plate = RCPN-AMC08
Face Plate = RETSTFPL

IMPORTANT: *Existing Comfort Control² System Condensing Units & Heat Pumps are compatible with EcoNet when matched with a R802V Gas Furnace and with an EcoNet Translator (RETRN620CC2) installed on the Comfort Control² System control board.*

*Available through PROSTOCK®.

GENERAL TERMS OF LIMITED WARRANTY*

Rheem will furnish a replacement for any part of this product which fails in normal use and service within the applicable period stated, in accordance with the terms of the limited warranty.

***For complete details of the Limited and Conditional Warranties, including applicable terms and conditions, contact your local contractor or the Manufacturer for a copy of the product warranty certificate.**

Parts* .....Ten (10) Years
Heat Exchanger .....Limited Lifetime

The new degree of comfort.™

In keeping with its policy of continuous progress and product improvement, Rheem reserves the right to make changes without notice.

Rheem Heating, Cooling & Water Heating • P.O. Box 17010
Fort Smith, Arkansas 72917 • www.rheem.com

Rheem Canada Ltd./Ltée • 125 Edgeware Road, Unit 1
Brampton, Ontario • L6Y 0P5

INTEGRATED HOME COMFORT

PRINTED IN U.S.A. 2/17 QG FORM NO. G11-546 REV. 2